OBRAZAC 1

Elektronski potpis projektanta	Elektronski potpis revidenta	Elektronski potpis nadležnog organa za izdavanje građevinske dozvole
Marko Đekić Digitally signed by Marko Đekić Date: 2025.07.01 11:51:44 +02'00' Ilija Radulović Digitally signed by Ilija Radulović Date: 2025.07.01 11:52:16 +02'00'	Vladimir Filipović Digitally signed by Vladimir Filipović DN: c=ME, ou=Pravno lice, 2.5.4.97=VATME-02333643, o=Institut za razvoj i istraživanja u oblasti zaštite na radu Podgorica, serialNumber=68180, givenName=Vladimir, sn=Filipović, cn=Vladimir Filipović Date: 2025.09.04 07:18:02 +02'00' Goran Šćepanović Digitally signed by Goran Šćepanović DN: c=ME, ou=Pravno lice, 2.5.4.97=VATME-02333643, o=Institut za razvoj i istraživanja u oblasti zaštite na radu Podgorica, serialNumber=68178, givenName=Goran, sn=Šćepanović, cn=Goran Šćepanović Date: 2025.09.04 07:29:54 +02'00'	

INVESTITOR: JZU Opšta bolnica Bijelo Polje

OBJEKAT: Rekonstrukcija postojećeg objekta bolnice u Bijelom Polju - dio lamela "C"

LOKACIJA: UP 29a u zahvatu DUP-a "Medanovići", koja se sastoji od katastarski parcela 1933/1, 1933/12, 1964/7, 1940, 1963/3 i 1933/17 KO Bijelo Polje

DIO TEHNIČKE DOKUMENTACIJE: **MP_MAŠINSKI PROJEKAT**

FOLDER 2.4.3 SPRINKLER INSTALACIJE

AUTOR PROJEKTA: "ING INVEST" d.o.o. Danilovgrad

PROJEKTANT: "ING INVEST" d.o.o. Danilovgrad

ODGOVORNO LICE: Arh. Ilija Radulović, spec.sci.

VODEĆI PROJEKTANT: Arh. Ilija Radulović, spec.sci.
br.lic. UPI 107/7-575/2

ODGOVORNI PROJEKTANT: Marko Đekić, dipl.maš.inž, br.licence UPI 107/7-479/2

SARADNICI NA PROJEKTU: Olivera Ćirković dipl.inž.maš.
Kristina Nikolić dipl.inž.maš.

Jun 2025.

SADRŽAJ TEHNIČKE DOKUMENTACIJE

FOLDER 1/2 — OPŠTI DIO

1.1.	Opšta dokumentacija
1.2.	Projektni zadatak
1.3.	Idejno rješenje

FOLDER 2/2 — DJELOVI TEHNIČKE DOKUMENTACIJE

2.1. FOLDER	**AP_ARHITEKTONSKI PROJEKAT**
2.1.1. Folder	Arhitektura sa uređenjem terena
2.1.2. Folder	Projekat namještaja i opreme
2.2. FOLDER	**GP_GRAĐEVINSKI PROJEKAT**
2.2.1. Folder	Konstrukcija
2.2.2. Folder	Hidrotehničke instalacije
2.2.3. Folder	Saobraćaj
2.3. FOLDER	**EP_ELEKTROTEHNIČKI PROJEKAT**
2.3.1. Folder	Elektrotehnične instalacije jake struje i automatike
2.3.2. Folder	Elektrotehnične instalacije slabe struje
2.4. FOLDER	**MP_MAŠINSKI PROJEKAT**
2.4.1. Folder	Termotehničke instalacije
2.4.2. Folder	Instalacija medicinskih gasova
2.4.3. Folder	Sprinkler instalacije
2.4.4. Folder	Projekat TNG instalacija
2.4.5. Folder	Projekat liftova
2.5. FOLDER	**OP_OSTALI PROJEKTI I ELABORATI**
2.5.1. Folder	Elaborat protivpožarne zaštite
2.5.2. Folder	Elaborat zaštite na radu
2.5.3. Folder	Saobraćajna signalizacija
2.5.4. Folder	Pejzažna arhitektura
2.5.5. Folder	Elaborat energetske efikasnosti
2.5.6. Folder	Projekat organizacije i tehnologije građenja
2.5.7. Folder	Elaborat o detaljnim geotehničkim istraživanjima
2.5.8. Folder	Elaborat originalnih terenskih podataka o izvršenim radovima na terenu
2.5.9. Folder	Sinhron plan
2.5.10. Folder	Tenderska dokumentacija

SADRŽAJ DIJELA TEHNIČKE DOKUMENTACIJE

1. TEKSTUALNA DOKUMENTACIJA

1.1 Tehnički opis sprinkler instalacija
1.2 Tehnički uslovi za izvođenje radova
1.3 Program kontrole i osiguranja kvaliteta
1.4 Karakteristike i svojstva materijala
1.5 Spisak propisa, standarda i literature

2. *PRORAČUNSKA DOKUMENTACIJA*

2.1 Proračuni
2.2 Predmjer i predračun radova

3. GRAFIČKA DOKUMENTACIJA

00 Pozicija rezervoara
01 Suteren - Raspored sprinkler opreme
02 Prizemlje -Raspored sprinkler opreme
03 I Sprat - Raspored sprinkler opreme
04 Presjek 1-1
05 Presjek 2-2
06 Presjek 3-3
07 Aksonometrija
08 Aksonometrija podstanice
09 Tehnološka šema
10 Oslonci cjevovoda
11 Detalj ugradnje mlazmice

TEKSTUALNA DOKUMENTACIJA

Tehnički opis instalacija

TEHNIČKI OPIS SPRINKLER INSTALACIJE

➢ *LOKACIJA INSTALACIJE I PREDMET ZAŠTITE*

Stabilna automatska instalacija za gašenje požara - sprinkler instalacija predviđena je za gašenje požara vodom.

Sprinkler instalacija pokriva cjelokupan objekat bolnice.

Glavnim projektom predviđena je mokra sprinkler instalacija, jer u objektu koji se štiti ne postoji mogućnost zamrzavanja vode u cjevovodima. U objektu je shodno propisima određena klasa požarne opasnosti ***OH1 za bolnice.***

➢ *OPIS INSTALACIJE*

Sprinkler instalacija spada među najefikasnije instalacije za gašenje požara. To je automatska stabilna instalacija za gašenje požara rasprskavajućim mlazom vode, koja u pripremnom položaju prije aktiviranja ima zatvorene mlaznice, koje se otvaraju na određenoj povišenoj temperaturi i na taj način započinje automatsko aktiviranje instalacije.
Cjevovodi mokre sprinkler instalacije su stalno napunjeni vodom pod pritiskom. Od trenutka aktiviranja instalacije, trenutno dolazi voda do mjesta gdje se pojavio požar. Gašenje požara se vrši određenim brojem mlaznica, zavisno od brzine širenja požara.

Pored gašenja, pri aktiviranju sprinkler instalacije istovremeno vrši i dojavu požara davanjem alarmnog signala, jer je svaka sprinkler mlaznica istovremeno i termomaksimalni javljač požara.

➢ *TIP INSTALACIJE*

Za sistem za automatsko gašenje požara vodom tipa sprinkler sistem usvojen je mokri alarmni ventil.

Mlaznice odnosno sprinkleri predviđeni su na maksimalno 12 m2 korisne površine prostora, a da se pri tome poštuju svi ostali uslovi koji važe za razmještaj mlaznica. Mokra sprinkler instalacija se sastoji od instalacije postavljene vidno odnosno od stojećih (mlaznice u spuštenom plafonu) i visećih mlaznica. Instalacija je podeljena na dva mokra sprinkler ventila.

MSV-1-za nivo sprata

MSV-2- za nivo suterena i prizemlja

➢ *OSNOVNI ELEMENTI INSTALACIJE*

Sprinkler instalacija se sastoji od sledećih elemenata:

- pumpno postrojenje,
- mokri sprinkler ventil,
- cijevna mreža na kojoj su postavljene sprinkler mlaznice;
- sprinkler mlaznice stojeće
- dovodni cjevovod,
- ostala prateća armatura.

➢ *SPRINKLER VENTILSKA STANICA*

Sprinkler ventilska stanica se nalazi na nivou suterena. U ovoj prostoriji se nalaze mokri sprinkler ventil sa pratećom armaturom, i ostala neophodna oprema.Ova prostorija je obezbijeđena od niskih temperature. Sprinkler stanica predstavlja poseban požarni sektor otporan na požar 120 minuta (vrata samozatvarajuća otporna na požar 90 minuta).

Za povišenje pritiska u cjevovodnoj mreži sprinkler sistema predviđen je pumpni set koji se sastoji od 2 elektro (radna i rezervna) protivpožarne pumpe i jedne džokej pumpe, za održavanje pritiska u cjevovodnoj mreži proizvođača KDN 32-200/210 11kW EN 12845 T - JET

Startovanje pumpi prema MEST EN12845:

- Protivpožarna pumpa 1 – 0,8xp
- Protivpožarna pumpa 2 –se uključuje ako radna pumpa iz bilo kog razloga nije uspjela da startuje.
- džokej pumpa – p+0,5 bar
- gde je p – pritisak pri nultom protoku protivpožarne pumpe.

Radni pritisak za odabranu pumpu pri nultom protoku je 6 bar.

Rad pumpi:

- džokej pumpa (pumpa za održavanje pritiska u cjevovodnoj mreži) se posredstvom automatike sa presostatima uključuje kada pritisak u instalaciji dostigne određenu vrijednost, a isključuje se kada poveća pritisak u instalaciji na određenu vrijednost;
- elektro pumpa (radna) se posredstvom automatike sa presostatima uključuje kada pritisak u instalaciji dostigne određenu vrijednost. Onog trenutka kada startuje ova pumpa mora se automatski ugasiti džokej pumpa. Rad elektro pumpe znači da imamo stanje požara pa automatsko isključivanje rada ove pumpe ne smije postojati, tj. rad ove pumpe se može samo ručno prekinuti. Takođe ne smije postojati ni zaštita pumpe od rada "na suvo";

- elektro pumpa (rezervna) se posredstvom automatike sa presostatima uključuje ako radna pumpa iz bilo kog razloga nije uspjela da startuje. U trenutku kada pritisak u instalaciji dostigne

određenu vrijednost, nižu od tačke uključivanja džokej pumpe.Rad elektro pumpe znači da imamo stanje požara pa automatsko isključivanje rada ove pumpe ne smije postojati, tj. rad ove pumpe može biti samo ručno prekinut.

Pumpno postrojenje je smješteno u posebnoj prostoriji koja je obezbijeđena od niskih temeperatura. Pozicija pumpe je prikazana grafičkom dokumentacijom.

Signali pumpi:

Svi signali, dobijeni od monokompaktnog pumpnog postrojenja, moraju biti dati u okviru sistema za nadzor i upravljanje.

- džokej pumpa
rad džokej pumpe
kvar džokej pumpe

- elektro pumpa (radna)
spremna za rad
neuspijeli start
rad elektro pumpe

- elektro pumpa (rezervna)
spremna za rad
neuspijeli start
rad elektro pumpe

Signali od ovalnih zasuna:

Mikroprekidači na ovim ovalnim zasunima treba da daju, u okviru sistema za nadzor i upravljanje ili sistema za dojavu požara, signal ako ventil nije u odgovarajućem položaju.

Signal presostata mokrog sprinkler ventila:

Presostat sprinkler ventila daje signal da je podignuta klapna sprinkler ventila.

Signali indikatora protoka:

Indikator protoka je uređaj koji usled kretanja vode kroz cijev (u jednom smjeru) daje kontakt koji se prenosi ka protivpožarnoj centrali. Ovakav signal se tretira kao siguran požar. Izvršne funkcije protivpožarne centrale moraju biti adekvatne stanju požara. Indikator protoka se nalazi na horizontalnom dijelu cjevovoda, i to na dovodnom cevovodu iz sprinkler pumpne stanice

Priključak za vatrogasno vozilo:

Priključak za vatrogasno vozilo je priključak koji se nalazi na nivou suterena (prikazano grafičkom dokumentacijom) i on je još jedna mjera sigurnosti, koja omogućava da se vatrogasno vozilo priključi na sprinkler sistem i da na taj način gasi požar. Ova dodatna mjera sigurnosti je predviđena u slučaju da u gradskom vodovodu nema vode.

Hidrauličko alarmno zvono:

Prilikom podizanja klapne sprinkler ventila, oslobađa se otvor ka hidrauličkom alarmnom zvonu koje usled proticanja vode daje alarm. Tehnološkom šemom je dat princip rada cijele instalacije sa svim svojim elementima.

- *MREŽA CJEVOVODA*

Mreža cjevovoda ima osnovnu funkciju da spaja sprinkler mlaznice sa izvorom vode, osiguravajući osnovne potrebne parametre - količinu vode i pritisak. Vodi se tako da se pokrije cijela površina koja se štiti. Izrađuje se od crnih bešavnih cijevi.

Cijevi se međusobno spajaju zavarivanjem iznad prečnika DN50,a za DN50 i manje prečnike, spajanje je predviđeno pocinkovanim navojnim fitingom prema preporukama CEA 4001.

Cjevovodi se vode sa nagibom prema mjestima ispusta, kako bi se mogli isprazniti.Na krajevima magistralnih cjevovoda predviđene su slavine za ispiranje.

Pad iznosi:

-0,4% za glavne cijevi

-0,2% za razvodne cjevovode

Način formiranja cjevne mreže ima direktan uticaj na uniformnost pokrivanja štićenog prostora. Praktični uslovi i mogućnosti odredili su raspored cjevne mreže i to u zavisnosti od konstrukcije i namjene objekta.

Maksimalni dozvoljeni pritisak u cjevovodu ne smije da pređe vrijednost od pmax. = 10 bar.

- *SPRINKLER MLAZNICE*

Sprinkler mlaznice su važan elemenat sprinkler instalacije, jer vrše njeno aktiviranje. One se pri određenoj temperaturi otvaraju, a svojom konstrukcijom omogućavaju rasipanje vode tako da ona ravnomerno kvasi površinu na kojoj se desio požar.

Sprinkler mlaznica se sastoji od sledećih djelova:

- tijela mlaznice
- zatvarača kojeg na sjedištu drži ampula ispunjena ekspanzivnom tečnošću (ampula puca kada temperatura oko mlaznice dostigne vrednost od 68 ^{o}C)
- raspršivača učvršćenog na vrhu tijela mlaznice

Sprinkler mlaznice se postavljaju sa deflektorom mlaza okrenutim gore (stojeće)u dijelu spuštenog plafona. Distanca između deflektora mlaznice i plafona (ploče) treba da bude 75-150 mm.Minimalno dozvoljeni pritisak na sprinkler mlaznici iznosi Pmin = 0.35 bar.

Viseće mlaznice postavljaju se u prostorima gdje imamo spušteni plafon.

- *NAČIN RADA INSTALACIJE*

Cijela instalacija je napunjena vodom pod pritiskom.
Svaka mlaznica na svom izlaznom dijelu ima ampulu koja zatvara otvor.
Prilikom pojave temjerature od 68 ^{o}C, dolazi do pucanja ampule na mlaznici usled širenja ekspanzione tečnosti koja se nalazi u ampuli. Na taj način se otvara izlaz vodi.

Voda udara u deflektor i raspršava se tako da u kružnoj lepezi pokriva površinu koja se štiti.

U slučaju da prvo aktivirana sprinkler mlaznica ne uspije da ugasi požar, pa se on proširi, otvaraju se sledeće sprinkler mlaznice u neposrednoj blizini mjesta požara.

Usled otvaranja mlaznice pada pritisak u gornjoj komori sprinkler ventila, podiže se klapna u sprinkler ventilu. Voda iz pumpne stanice protiče ka sprinklerskim mlaznicama. Preko žleba u sjedištu sprinkler ventila voda ulazi u cjevovod prema hidrauličkom alarmnom zvonu.

Alarmno zvono se nalazi van tehničke prostorije na zidu, na visini od oko 2 metra od kote poda.

Prilikom kretanja vode u cjevovodima, indikator protoka, daje impuls koji se prenosi na centralu za dojavu požara, a ona zatim daje alarmni signal da je instalacija proradila.

ŠEMATSKI PRIKAZ RADA MOKROG SPRINKLER VENTILA
SISTEM U NORMALNOM STANJU

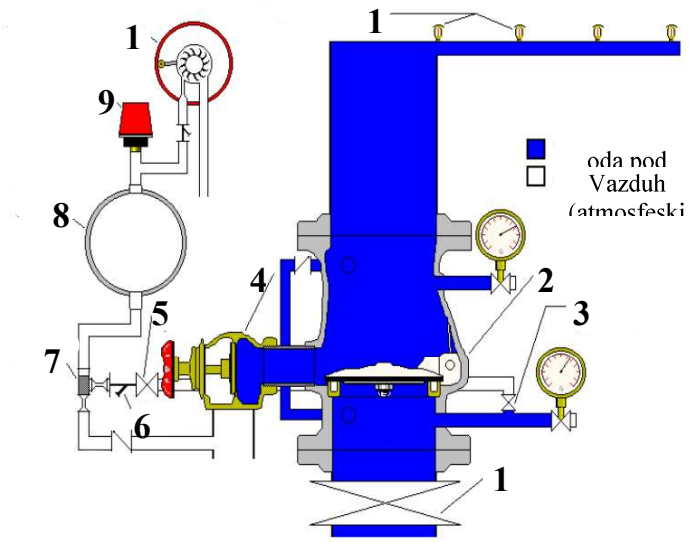

1 - Glavni zaporni ventil
2 - Klapna sprinkler ventila
3 - Ventil za testiranje alarmnog zvona (normalno zatvoren)
4 - Glavni drenažni ventil
5 - Ventil hidrauličkog alarmnog zvona (normalno otvoren)
6 - Odvajač nečistoća
7 - Set ograničenog protoka
8 - Posuda za eliminisanje lažnog alarma
9 - Presostat
10 - Hidrauličko alarmno zvono
11 - Sprinkler mlaznice

POČETAK RADA INSTALACIJE
(PUCANJE AMPULE SPRINKLER MLAZNICE)

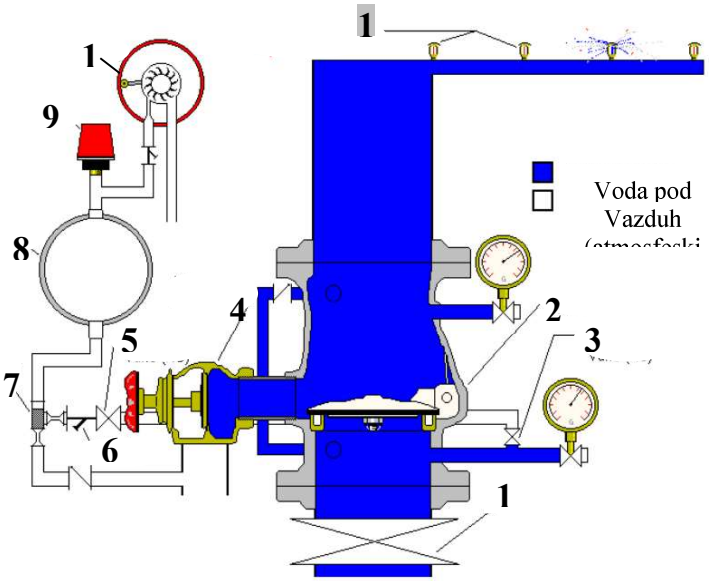

1. Glavni zaporni ventil
2. Klapna sprinkler ventila
3. Ventil za testiranje alarmnog zvona (normalno zatvoren)
4. Glavni drenažni ventil
5. Ventil hidrauličkog alarmnog zvona (normalno otvoren)
6. Odvajač nečistoća
7. Set ograničenog protoka
8. Posuda za eliminisanje lažnog alarma
9. Presostat
10. Hidrauličko alarmno zvono
11. Sprinkler mlaznice (PUCANJE AMPULE SPRINKLER MLAZNICE)

PODIZANJE KLAPNE SPRINKLER VENTILA

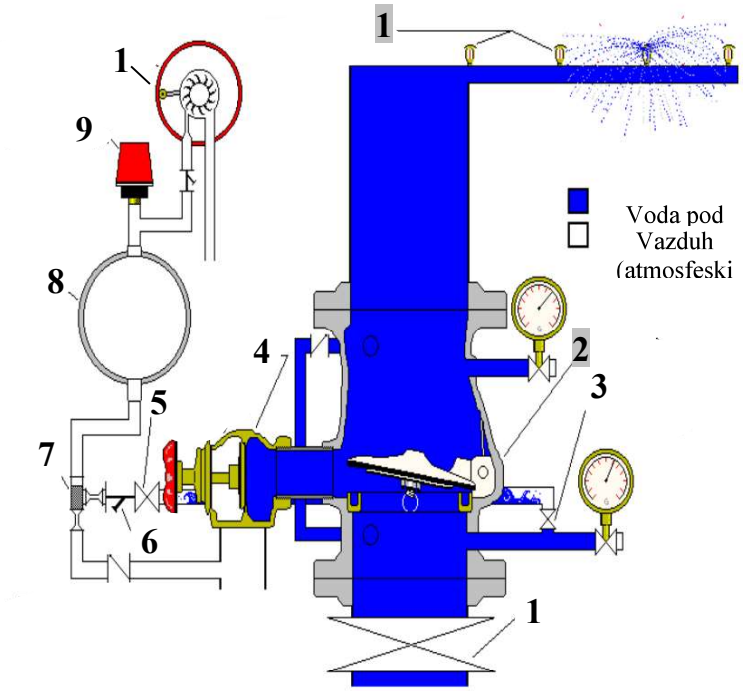

1. Glavni zaporni ventil
2. Klapna sprinkler ventila
3. Ventil za testiranje alarmnog zvona (normalno zatvoren)
4. Glavni drenažni ventil
5. Ventil hidrauličkog alarmnog zvona (normalno otvoren)
6. Odvajač nečistoća
7. Set ograničenog protoka
8. Posuda za eliminisanje lažnog alarma
9. Presostat
10. Hidrauličko alarmno zvono
11. Sprinkler mlaznice

PUNJENJE POSUDE ZA ELIMINISANJE LAŽNOG ALARMA
(KADA PROTOK KROZ SET OGRANIČENOG PROTOKA POSTANE VEĆI, POČINJE PUNJENJE POSUDE ZA ELIMINISANJE LAŽNOG ALARMA)

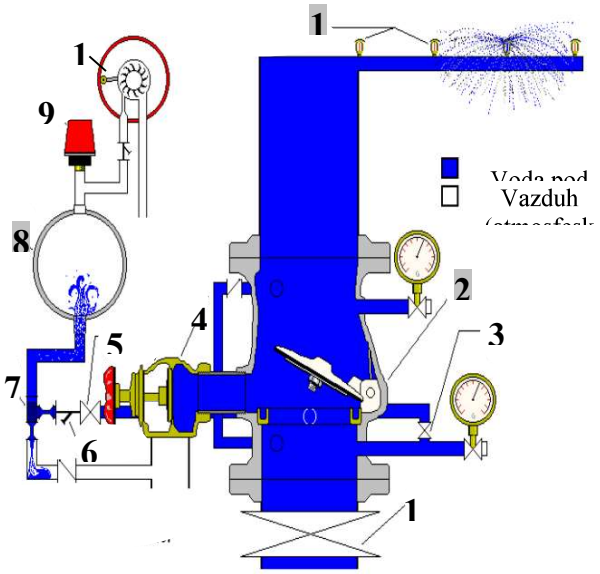

1. Glavni zaporni ventil
2. Klapna sprinkler ventila
3. Ventil za testiranje alarmnog zvona (normalno zatvoren)
4. Glavni drenažni ventil
5. Ventil hidrauličkog alarmnog zvona
6. Odvajač nečistoća
7. Set ograničenog protoka
8. Posuda za eliminisanje lažnog alarma
9. Presostat
10. Hidrauličko alarmno zvono
11. Sprinkler mlaznice

POČETAK RADA PRESOSTATA I HIDRAULIČKOG ALARMNOG ZVONA

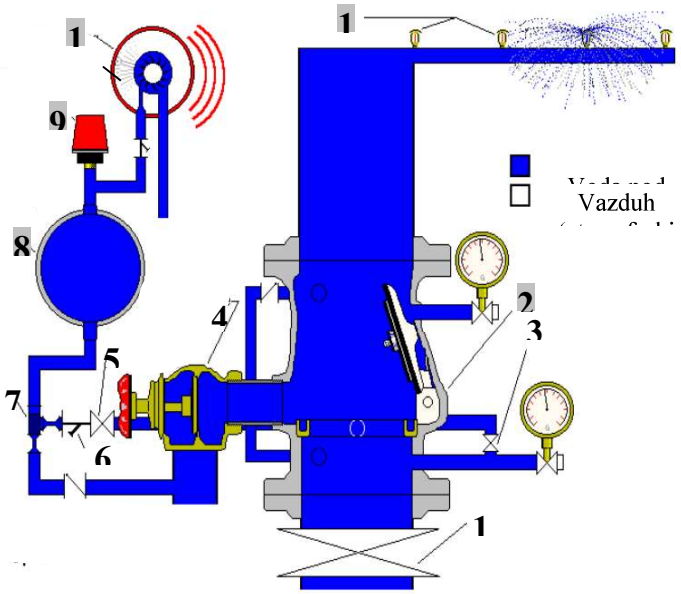

1. Glavni zaporni ventil
2. Klapna sprinkler ventila
3. Ventil za testiranje alarmnog zvona (normalno zatvoren)
4. Glavni drenažni ventil
5. Ventil hidrauličkog alarmnog zvona
6. Odvajač nečistoća
7. Set ograničenog protoka
8. Posuda za eliminisanje lažnog alarma
9. Presostat
10. Hidrauličko alarmno zvono
11. Sprinkler mlaznice

- *Potrebna količina vode za sprinkler sistem*

Proračun potrebne količine vode, izvršen je u skladu sa MEST EN 12845 standardom - Instalacije za gašenje požara - Automatski sprinkler sistemi - Projektovanje, ugradnja i održavanje i dobijeni su sledeći paramateri sistema: Maksimalna potrošnja vode dobijena proračunom za najnepovoljniji slučaj protoka iznosi: Q =410 l/min.

- *Snabdijevanje vodom*

Za pravilan i siguran rad sprinkler instalacije najvažniju ulogu ima sigurno snabdijevanje vodom, dovoljne količine sa potrebnim pritiskom tokom vremena gašenja. Snabdijevanje vodom mora biti pouzdano i ne smije biti ugroženo niskim temperaturama. Sprinkler instalacija će se snabdijevati vodom iz gradskog vodovoda i redukovanog rezervoara zapremine 10 m^3 koji je dimenzionisan prema propisu za ovu vrstu požarne opasnosti. Pozicija rezervoara je prikazana grafičkom dokumentacijom.

- *Snabdijevanje pumpi električnom energijom*

Kablovi koji napajaju električnom energijom pumpe treba da budu cijelom dužinom zaštićeni od požara u trajanju od 90 minuta. Način vođenja, način zaštite, način uzemljenja cijele instalacije kao i karakteristike kablova se mogu vidjeti u projektu elektroenergetskih instalacija.
Snabdijevanje električnom energijom pumpnog postrojenja je obezbijeđeno u svakom trenutku iz dva izvora, gradske distributivne mreže i dizel agregata.

- *Lista signala sprinkler instalacija*

Broj signala	*Oznaka*	*Objašnjenje*	*Povezan sa*
1	*OZ-1*	*Zasun DN100 na priključku iz gradskog vodovoda* ***regularno stanje - otvoren***	*Sistemom za nadzor*
2	*OZ-2*	*Zasun DN100 Na potisu pumpe* ***Regularno stanje - otvoren***	*Sistemom za nadzor*
3	*OZ-3,*	*Zasun DN100 na test liniji* ***regularno stanje - zatvoren***	*Sistemom za nadzor*
4	*OZ-5, OZ-6*	*Zasun DN100 ispred suvog sprinkler ventila (MSV1 DN100)regularno stanje - otvoren*	*Sistemom za nadzor*
5	*OZ-4*	*Zasun DN100 na priključku vatrogasnog vozila* ***regularno stanje - otvoren***	*Sistemom za nadzor*
6	*OZ-9, OZ-8,OZ 8.1* *OZ-7*	*Zasun DN100 ispred indikatora protoka DN100* ***regularno stanje – otvoren*** *Zasun DN50 ispred indikatora protoka DN50* ***regularno stanje - otvoren***	*Sistemom za nadzor*
7	*Elektro pumpa(radna)*	*Automatski režim rada isključen*	*Sistemom za nadzor*
8	*Elektro pumpa (radna)*	*Neuspjeli start*	*Sistemom za nadzor*
9	*Elektro pumpa (radna)*	*Rad elektro pumpe*	*Sistemom za nadzor*
10	*Elektro pumpa (radna)*	*Nema napona 220 VAC*	*Sistemom za nadzor*
11	*Elektro pumpa (rezervna)*	*Automatski režim rada isključen*	*Sistemom za nadzor*
12	*Elektro pumpa (rezervna)*	*Neuspjeli start*	*Sistemom za nadzor*
13	*Elektro pumpa (rezervna)*	*Rad elektro pumpe*	*Sistemom za nadzor*
14	*Elektro pumpa (rezervna)*	*Nema napona 220 VAC*	*Sistemom za nadzor*
15	*Dzokej pumpa*	*Rad dzokej pumpe*	*Sistemom za nadzor*
16	*Dzokej pumpa*	*Automatski režim rada isključen*	*Sistemom za* *nadzor*
17	*Dzokej pumpa*	*Kvar dzokej pumpe*	*Sistemom za nadzor*
18	*IP*	*Indikator protoka-*	*Protivpožarnom centralom*
19	*PS-1, PS2*	*Presostat mokrih sprinkler ventila MSV1 i MSV2* ***- signal da voda prolazi kroz klapnu mokrog sprinkler ventila***	*Sistemom za nadzor*

➢ *Ventilacija sprinkler podstanice*

Sprinkler podstanica ovog objekta se nalazi na suterena. U skladu sa standardom odrađen je proračun za ventilaciju ove prostorije na dva načina. Usvojena je veća količina vazduha. Ventilator za ventilaciju ove prostorije je smješten u samoj prostoriji. Dimenzionisan je na osnovu potrebnog protoka i pada pritiska. Ventilator je proizvođača: SODECA, protok: 1650m^3/h. Ventilator se montira na zid prostorije, sve prema grafičkoj dokumentaciji. Izlaz za odvod vazduha se nalazi na fasadi objekta kako je i prikazano grafičkom, dokumentacijom.

Nadoknada vazduha se vrši preko rešetki koje se montiraju u donjoj zoni vrata. Rešetke su dio AG projekta.

NAPOMENA: PLOVCI ZA DOPUNU REZERVOARA SU DIO PROJEKTA ViK-a.

U Podgorici, Jun 2025 god.

Odgovorni inženjer:

Marko Đekić dipl.inž.maš.

_____

Tehnički uslovi za izvođenje radova

Tehnički uslovi za izvođenje radova

- Prije ustupanja izgradnje investitor utvrđuje podobnost izvođača radova, a zatim ustupa izgradnju objekta nadmetanjem, prikupljanjem ponuda ili neposrednom pogodbom.

- Investitor i izvođač radova zaključuju Ugovor o izvođenju radova, koji sadrži sledeće:
    - rok početka i rok završetka radova,
    - način naplate izvršenih radova i ugovorene penale,
    - garantni rok,
    - nadzor investitora nad izvođenjem postrojenja,
    - obaveze izvođača da postrojenje izradi prema odobrenom projektu i u skladu sa postojećim standardima, tehničkim uputstvima i normama.

- Izgradnja se može započeti tek kada investitor pribavi odobrenje za izgradnju objekta.

- Investitor je dužan da izvođača radova uvede u posao, što naročito obuhvata:
    - predaju gradilišta i prava pristupa gradilištu;
    - obezbeđenje priključaka za struju i vodu, goriva i sl.
    - predaju tehničke dokumentacije;
    - predaju odobrenja za izgradnju objekta;
    - obezbeđenje sredstava za finansiranje izgradnje objekta i plaćanje obaveza, sa pružanjem dokaza o tome.

- O uvođenju izvođača radova u posao sastavlja se poseban zapisnik i to se konstatuje u građevinskom dnevniku.

- Izvođač radova vodi na propisan način građevinski dnevnik i građevinsku knjigu, u koje unosi podatke toku i načinu izgradnje objekta.

- Izvođač radova prijavljuje gradilište organu uprave, nadležnom za poslove građevinske inspekcije, najmanje 8 dana prije namjeravanog početka izvođenja radova.

- Izvođač radova je dužan da blagovremeno i detaljno prouči projekat na osnovu koga se izvode ugovoreni radovi i, saglasno pravilima struke, ispita pravilnost tehničkih rešenja.

- Investitor je dužan da izvođaču pruži tražena objašnjenja o nedovoljno jasnim detaljima tehničke dokumentacije.

- Izvođač radova nema pravo da mijenja tehničku dokumentaciju. Ako uoči nedostatke u njoj, dužan je da o tome blagovremeno obavijesti investitora.

- Tehnička dokumentacija može da se mijenja samo uz pristanak investitora i projektanta.

- Izvođač radova je dužan da pregleda objekat i utvrdi da li su i kako su prema projektu izvedeni svi građevinski radovi, koji su u vezi sa izvođenjem ove instalacije.

- Ukoliko postoje znatna odstupanja, izvođač je dužan da nedostatke pismeno prijavi investitoru i da traži od investitora prilagođenje projekta.
- Izvođač radova u toku radova treba:
    - da izvodi radove prema tehničkim propisima, normativima i standardima, koji važe za predmetne instalacije;
    - da ugrađuje materijal koji odgovara propisanim standardima, odnosno koji ima atest izdat od strane stručne organizacije ovlašćene za ispitivanje tog materijala da blagovremeno preduzima mjere za sigurnost objekta, radova, opreme, uređaja i instalacija, radnika, prolaznika, saobraćajnih sredstava, susjednih objekata i okoline;
    - da se pridržava projekata na osnovu kojih je izdato odobrenje za izgradnju objekta; da uredno održava gradilište;
    - da svojom kontrolom obezbijedi da se radovi izvode u skladu sa ovim zahtjevima, kako bi se izbjegle štetne posledice, koje se mogu javiti usled nepravilnosti pri izgradnji objekta.

- Izvođač je dužan da upozori investitora na uočene/utvrđene nedostatke materijala i opreme koji su predvođeni projektom, kao i materijala i opreme koju je investitor nabavio/odabrao.

- Izvođač je dužan da pruži dokaze o kvalitetu upotrebljenog materijala, opreme i izvedenih radova, kao i da investitoru omogući kontrolu.

- U toku izvođenja radova izvođač je dužan da primijećene nedostatke otkloni u datom roku.

- Ugovarač je dužan da blagovremeno obavijesti drugog ugovarača o okolnostima od uticaja na ispunjenje ugovora.

- Za sve naknadne i nepredviđene radove koji nijesu ugovoreni, a investitor zahtijeva da se izvedu, izvođač će podneti dopunsku ponudu, posle čijeg prihvatanja se radovi mogu izvoditi.

- Stručni nadzor investitora:
    - investitor vrši stručni nadzor nad radovima izvođača radi provjeravanja i obezbjeđenja njihovog urednog obavljanja, naročito u pogledu vrsta, količina i kvaliteta radova, materijala i opreme i previđenih rokova;
    - stručni nadzor vrši lice koje investitor odredi za nadzornog organa, pri čemu o njegovim ovlašćenjima obavještava izvođača;
    - izvođač je dužan da investitoru omogući vršenje stručnog nadzora; sve primjedbe nadzornog organa saopštavaju se u pismenoj formi, preko dnevnika.

- Osiguranje, uskladištenje i čuvanje opreme i materijala:
    - izvođač radova snosi troškove osiguranja opreme, materijala i radova od uobičajenih rizika, do njihove vrednosti;
    - izvođač je dužan da opremu i materijal uskladišti, čuva i održava do ugrađivanja;
    - izvođač snosi troškove obezbjeđenja i čuvanja izvedenih radova i ugrađene opreme i materijala i rizik njihovog oštećenja, uništenja, odnošenja i propadanja.
- Pipremni i završni radovi:

- izvođač je dužan da o svom trošku organizuje gradilište, izgradi privremene objekte za smeštaj opreme, materijala, alata, radionice i radne snage, kao i da obezbijedi potrebnu mehanizaciju i prevoz radnika i sl.
- izvođač je dužan da o svom trošku preda investitoru projekat izvedenih radova, koji obuhvata sve izmjene i dopune koje su uslijedile u toku izvođenja radova, u broju primjeraka prema ugovoru;
- po definitivno izvedenim radovima, izvođač je dužan da o svom trošku izradi šeme i uputstva za rukovanje i održavanje cijele instalacije ili postrojenja, koji su ovjereni od strane projektanta, i da ih preda investitoru, u broju primeraka prema ugovoru;
- po završenim radovima izvođač je dužan da o svom trošku povuče svoje radnike sa gradilišta, ukloni preostali materijal, opremu i sredstva za rad, kao i privremene objekte koje je sagradio i očisti objekat i gradilište.

- Garancija za kvalitet radova:

  - garantni rok za izvedene radove iznosi 2 (dvije) godine, ako ugovorom nije drugačije određeno;
  - izvođač garantuje da su izvedeni radovi, u vrijeme primopredaje, u skladu sa ugovorom, propisima i pravilima struke, i da nemaju mana koje umanjuju njihovu vrijednost ili podobnost za redovnu upotrebu, odnosno namjenu;
  - garantni rok počinje da teče od dana primopredaje izvedenih radova;
  - za ugrađenu opremu važi garancija proizvođača opreme, s tim što je izvođač dužan da svu dokumentaciju o garancijama, zajedno sa uputstvima za upotrebu, pribavi i preda investitoru. Ako je investitor nabavio opremu, dužan je da sam pribavi navedenu dokumentaciju za nju;
  - u toku garantnog roka izvođač je dužan da o svom trošku otkloni u primjerenom roku sve nedostatke koji su nastupili usled toga što se izvođač nije pridržavao svojih obaveza u pogledu kvaliteta radova i materijala;
  - ako izvođač ne otkloni nedostatke u primjerenom roku koji mu investitor odredi, investitor može to da povjeri drugom na račun izvođača radova;
  - izvođač nije dužan da otkloni one nedostatke koji su nastali kao posledica nestručnog rukovanja i upotrebe, odnosno nenamjenskog korišćenja instalacije.

- Primopredaja i konačni obračun izvedenih radova:

  - po završetku radova izvođač obaveštava investitora da su radovi koji čine predmet ugovora završeni;
  - na zahtjev investitora ili izvođača radova, nadležni organ formira komisiju za tehnički pregled izvedenih radova;
  - po obavljenom tehničkom pregledu, nadležni organ donosi rešenje o upotrebi objekta, a zatim se pristupa primopredaji objekta i izvedenih radova;
  - po primopredaji izvedenih radova vrši se konačni obračun, kojim se raspravljaju odnosi između investitora i izvođača radova i utvrđuje izvršenje međusobnih obaveza;
  - konačnim obračunom se obuhvataju svi radovi izvedeni na osnovu ugovora, uključujući viškove i manjkove radova, kao i nepredviđene i naknadne radove;
  - svaki ugovarač snosi troškove svog učešća u izradi konačnog obračuna.

Ovi pogodbeni uslovi su sastavni deo glavnog projekta i u svemu su obavezni za izvođača radova, sem ukoliko nije drugačije regulisano ugovorom između investitora i izvođača.

- Svi ostali odnosi između investitora i izvođača radova regulišu se ugovorom.

POSEBNI TEHNIČKI USLOVI ZA SPRINKLER INSTALACIJE

UPUTSTVO ZA IZVOĐENJE

- Cijelu instalaciju treba montirati prema ovom projektu po dobijanju saglasnosti od nadležnog organa.

- Sve cijevi, nosače cevovoda i opremu prije montaže treba besprekorno očistiti i zaštititi osnovnom bojom.

- Proveriti nečistoću cijevi i sa unutrašnje strane, te ukoliko nijesu dovoljno čiste, očistiti ih čeličnom četkom.

- Svi elementi cijevi, armatura i druga oprema prije ugradnje treba da posjeduje atestiranu dokumentaciju i to cijevi na 16 bara, a armaturu na 10 bara.

- Spajanje cjevovoda vršiti zavarivanjem i navojnim spojevima.

- Posle završetka kompletne montaže izvršiti probu instalacije na hidraulični pritisak. Instalaciju treba ispitati na pritisak veći za 50% od radnog pritiska.

- Probu na traženi pritisak obaviti na sledeći način:

  Cijevna mreža je zatvorena sa sprinkler mlaznicama, a na drugom kraju zatvoriti ventil za dovod vode iz mreže.
  - Mrežu napuniti vodom i odzračiti.
  - Ručnom pumpom ostvariti pritisak od 12 bara. Ovaj pritisak držati 24 časa i kontrolisati eventualne padove pritiska.

Instalacija je zadovoljila hidrauličnu probu kada u traženom vremenu od 24 časa nije došlo do pada pritiska.

- Po završetku probe obavezno napraviti zapisnik koji se čuva kao trajni dokument. Posle završene montaže i probe instalacije na hidraulični pritisak, instalaciju ofarbati završno bojom.

- Na vidnom mjestu postaviti tablicu sa nadpisom firme izvođača sa godinom montaže.

PROBNI RAD, ODRŽAVANJE, NAČIN ISPITIVANJA I POVREMENA KONTROLA ISPRAVNOSTI INSTALACIJE

- Po završetku montaže i ispitivanja instalacije na hidraulički pritisak treba izvršiti funkcionalnu probu.

- Funkcionalnu probu vršiti uz prisustvo prestavnika investitora i prestavnika izvođača radova. Predstavnik investitora treba da bude nadzorni organ, a predstavnik izvođača radova šef gradilišta. Probu uređaja izvršiti na sledeći način:

  - potpaljivanjem sprinkler mlaznice,
  - otvaranjem ventila za probu na ventilskoj stanici.

  U prvom slučaju prilikom probe treba da se postigne sledeće:

  - isticanje vode na sprinkler mlaznici u raspršenom stanju,
  - za par desetina sekundi oglašavanje hidrauličkog zvona i slanja u glavni komandni centar,
  - da je uređaj aktiviran,

  U drugom slučaju otvaranjem ventila za probu na ventilskoj stanici treba da se postigne sledeće:

  - Ponavljaju se stavke a), b), i c) u prethodom slučaju.

- Posle izvršene probe sačiniti zapisnik koji će potpisati ovlašćena lica i čuvati kao trajni dokument. Zapisnik dostaviti na uvid tehničkoj komisiji za prijem.

- Kada je završeno gašenje onda se uređaj stavlja u mobilno stanje. Zamenjuje se sprinkler mlaznica, a zatim se voda ispušta iz mreže. Kada je mreža prazna, onda se sprinkler stanica - sprinkler ventil dovodi u ravnotežni položaj.

- Periodični pregledi obavljaju se u određenim vremenskim razmacima, a odnose se na sledeće:
  - proba funkcionalnosti,
  - čišćenje instalacije od eventualnih nečistoća,
  - zamjena ventila ili spoja koji curi,
  - čišćenje staklenih ampula na sprinkler mlaznicama.

- Proba funkcionalnosti kompletnog sistema vrši se na period do jedne godine i to sve u funkciji ostalog održavanja

ČIŠĆENJE INSTALACIJE

- Važno je da voda u instalaciji bude čista (bez mehaničkih nečistoća) kako ne bi došlo do začepljenja klapni i dr.
- Čišćenje instalacije obaviti godišnje.
- Sve ventile podmazati i spojeve koji cure dotegnuti i prekontrolisati.
- Staklene ampule obavezno očistiti od prljavštine jednom u tri mjeseca.

U Podgorici, Jun 2025 god.

Odgovorni inženjer:

Marko Đekić dipl.inž.maš.

_____

Program kontrole i osiguranja kvaliteta

PROGRAM KONTROLE I OSIGURANJA KVALITETA

Sa uslovima za ispunjavanje osnovnih zahtjeva za objekat tokom građenja i održavanja objekta (procedure za obezbjeđenje kvaliteta, program ispitivanja).

OPŠTE

Radove treba izvesti tačno prema opisu iz projekta, predmjeru i tehničkim uslovima za izvođenje radova, koji su sastavni dio ovog projekta. U stavkama gdje nije objašnjen način rada i posebne osobine finalnog proizvoda izvođač je dužan pridržavati se uobičajenog načina rada, uvažavajući odredbe važećih standarda, uz obavezu dobijanja kvalitetnog proizvoda. Osim toga, izvođač je obavezan pridržavati se uputstava projektanta u svim pitanjima koja se odnose na izbor i obradu materijala i način izvođenja pojedinih detalja, ukoliko nije već detaljno opisano predmjerom, a naročito u slučajevima kada se zahtijeva izvođenje van propisanih standarda. Sav materijal za izgradnju mora biti kvalitetan i mora odgovarati opisu predmjera i postojećim propisima. Cijene pojedinih radova moraju sadržavati sve elemente koji određuju cijenu gotovog proizvoda, a u skladu s odredbama predmjera.

Ako izvođač sumnja u ispravnost ili kvalitet nekog propisanog materijala i smatra da za takvo izvođenje ne bi mogao preuzeti odgovornost, dužan je da o tome obavijesti projektante i nadzornu službu s obrazloženjem i dokumentacijom. Konačnu odluku donosi projektant u saglasnosti s nadzornim inženjerom investitora, nakon proučenog predloga proizvođača. U slučaju da opis pojedine stavke nije dovoljno jasan, mjerodavna su uputstva i tumačenje projektanta. O tome se izvođač mora informisati već prilikom sastavljanja jedinične cijene.

KONTROLA KVALITETA

Kontrola kvaliteta sastoji se od:

- ispitivanja pogodnosti materijala,
- tekuće kontrole,
- kontrolnog ispitivanja, i
- provjere kvaliteta uskladištenih materijala.

Ispitivanje pogodnosti

Pogodnost materijala s obzirom na njegovu namjenu utvrđuje se prethodnim laboratorijskim ispitivanjima. Svojstva materijala moraju zadovoljiti zahtjeve tehničkih uslova. Uzorkovanje i ispitivanje obavlja licencirana institucija za kontrolu kvaliteta.

Tekuća kontrola

Tekuća kontrola obavlja se radi kontrole tehnološkog procesa. Tekuća ispitivanja obavlja proizvođač u vlastitoj laboratoriji ili ih o njegovom trošku obavlja organizacija za kontrolu kvaliteta. Učestalost i vrste tekućih ispitivanja propisani su tehničkim uslovima, zavisno od vrste i namjene materijala.

Kontrolno ispitivanje

Kontrolno ispitivanje obavlja se radi provjere usklađenosti kvaliteta proizvoda sa svojstvima i karakteristikama propisanih tehničkim uslovima. Kontrolna ispitivanja može obavljati jedino organizacija za kontrolu kvaliteta, koja obavlja i uzorkovanje materijala. Učestalost i vrste ispitivanja propisani su tehničkim uslovima, zavisno od vrste i namjene materijala. Za materijale koji podliježu obaveznom atestiranju, uzorkovanje i ispitivanje radi izdavanja atesta obavlja isključivo ovlašćena organizacija.

Dokumentacija

Izvještaj o ispitivanju kvaliteta s ocjenom pogodnosti materijala mora sadržati ove podatke:

1. opšti dio: naziv materijala, mjesto uzorkovanja, podatke o naručiocu ili proizvođaču, datum uzorkovanja i završetku ispitivanja, namjenu materijala i laboratorijsku oznaku uzorka,
2. rezultate svih laboratorijskih ispitivanja propisanih tehničkim uslovima za tu vrstu materijala,
3. ocjenu kvaliteta materijala s obzirom na vrstu i namjenu,
4. mišljenje o pogodnosti materijala s obzirom na namjenu.

Uvjerenje o kvalitetu proizvoda

Uvjerenje o kvalitetu proizvoda izdaje se poslije najmanje tri uzastopna kontrolna ispitivanja proizvoda kojima je ustanovljen propisani kvalitet. Uslov za izdavanje uvjerenja o kvalitetu je redovna evidencija rezultata tekuće kontrole.

Rok važenja uvjerenja o kvalitetu proizvoda može biti najviše jedna godina. Uvjerenje o kvalitetu proizvoda mora sadržavati ove podatke:

1. opšti dio: naziv proizvoda, deklaraciju, mjesto, podatke o proizvođaču i naručiocu, datum uzorkovanja, laboratorijske oznake uzorka;
2. pregledni prikaz rezultata kontrolnih ispitivanja na osnovu kojih se izdaje uvjerenje;
3. ocjenu kvaliteta i mišljenje o upotrebljivosti s obzirom na stalnost kvaliteta proizvoda namjeni materijala i svojstva primarne sirovine,
4. rok važenja uvjerenja.

Stalnost kvaliteta proizvoda do isteka roka važenja uvjerenja o kvalitetu prati se kontrolnim ispitivanjima.

Ispitivanja i atesti

Da bi se osigurao stalni kvalitet sastavnih materijala, a da bi se dobio odgovarajući uvid u kvalitet sastavnih materijala potrebno je:

1. Kontrolisati kvalitet materijala;
2. Osigurati odgovarajuću dokumentaciju o kvalitetu materijala;

3. Za ispitivanje materijala primjenjivati metode ispitivanja, standarde i propise date u tehničkim uslovima.

Atesti se izdaju za svu opremu i radove koji su prošli kompletnu proceduru ispitivanja. Obavezni atesti koje treba dostaviti u dokumentaciji u toku izvođenja radova su:

1. Zapisnik o probama na pritisak, hladna i topla;
2. Uvjerenje o kvalitetu cijevi;
3. Atesti ugrađene opreme i materijala;
4. Zapisnik za mjerenja o postignutim parametrima postrojenja (pritisci, temperature, protoci i sl.);
5. Zapisnici sa obavljenih funkcionalnih ispitivanja.

IZVOĐAČ RADOVA

Izvođač radova instalacije i montažer trebaju da budu registrovani za takvu djelatnost i licencirani od strane Inženjerske komore Crne Gore.

Graditi ili izvoditi pojedine radove na građenju, može pravno ili fizičko lice registrovano za obavljanje te djelatnosti (Izvođač radova) koje je upoznato sa pravilima struke navedenim u prikazu primijenjenih propisa i nepisanim pravilima struke, odnosno biti kvalifikovan za obavljanje predviđene djelatnosti.

Izvođač radova treba da dostavi Nadzoru potvrde zavarivača koji rade na instalaciji. Izvođač radova imenuje odgovornog inženjera građenja koji je obavezan sarađivati sa nadzornim inženjerom.

Izvođač radova je dužan:

1. ugrađivati materijale i opremu zahtijevanog kvaliteta u skladu sa projektom;
2. za vrijeme građenja na gradilištu imati svu atestnu dokumentaciju materijala i opreme koji se ugrađuju;
3. osiguravati dokaze o kvalitetu radova i ugrađene opreme prema zahtjevima iz projekta;
4. redovno voditi dnevnik građenja i u njega upisivati sve podatke u skladu sa Pravilnikom o vođenju dnevnika i redovno ga davati na uvid nadzornom inženjeru.

Obavještenje o završetku radova izvođač radova mora dostaviti pismenim putem.

Za kvalitet izvedenih radova izvođač radova garantuje dvije godine od datuma primopredaje radova odobrenih od strane nadzornog inženjera i puštanja u rad svih sistema. Minimalni garantni rok za ugrađenu opremu, prema Zakonu o zaštiti potrošača je dvije godine, a u dogovoru sa investitorom i nadzornim inženjerom, može se i produžiti.

U garantnom roku izvođač radova je dužan o svom trošku otkloniti sve nedostatke izazvane nepravilnim izvođenjem ili upotrebom nekvalitetnog materijala.

INVESTITOR – NARUČILAC POSLA

Građenje i nadzor nad građenjem investitor mora povjeriti licima registrovanim za obavljanje tih djelatnosti koje poznaju propise i pravila struke.

Investitor je dužan da prije početka radova dostavi izvođaču radova imena nadzornih inženjera zaduženih za nadzor izvođenja radova.

Naručilac posla - investitor treba da osigura nadzornu službu za nadzor nad izvođenjem u pogledu kvaliteta i kvantiteta radova. Nadzorni inženjer može biti samo osoba koja odgovara uslovima iz Zakona o planiranju prostora i izgradnji objekata.

Investitor će prema potrebi osigurati projektantski nadzor, a za sve bitne promjene tokom izvođenja radova od projektanta zatražiti pismenu saglasnost. U slučaju prekida radova investitor je dužan preduzeti mjere radi osiguranja gradilišta i susjednih površina.

Naručilac treba da odredi osobu kojoj će izvedene radove preuzeti od izvođača radova. Osoba mora biti dovoljno stručna da prihvati izvedene radove a to može biti u isto vrijeme osoba koja je radila nadzor.

NADZORNI INŽENJER

Nadzorni inženjer dužan je:

1. voditi računa da se gradi u skladu s projektnim rješenjem i Zakonom o planiranju prostora i izgradnji objekata;
2. voditi računa o tome da je kvaliteta radova, ugrađenih proizvoda i opreme u skladu sa zahtjevima projekta te da je taj kvalitet dokazan propisanim ispitivanjima i dokumentima;
3. redovno pratiti izvođenje radova i sve eventualne primjedbe upisivati u građevinski dnevnik.

ISPITIVANJA IZVEDENIH RADOVA

Nakon izvođenja radova po ovom projektu treba:

Obaveze investitora

1. Izdati rješenje osobi koja će primiti izvedene radove s obvezom obuke prilikom primanja.

Obaveze izvođača radova

1. Izvršiti obuku osobe koja će upravljati ugrađenim uređajima;
2. Izvršiti funkcionalnu probu svih instalacija, kao i obaviti puštanje u rad svih uređaja u prisustvu stručnih i ovlašćenih servisera;

3. Sva ispitivanja potkrijepiti potvrdama o usklađenosti za opremu i radove, a na kraju izdati garantne listove.

Obaveze nadzornog inženjera

1. Izvršiti vizuelan pregled cjelokupne instalacije i ustanoviti da li su svi dijelovi izvedeni po projektu;
2. Izvršiti pregled ugrađene opreme i konstatovati da su svi ugrađeni djelovi novi i atestirani i da posjeduju proizvođačke potvrde o usklađenosti;
3. Prisustvovati probama na pritisak i funkcionalnim probama do utvrđivanja da su probe uspjele.
4. Izvršiti obračun količina ugrađenih materijala i opreme;
5. Konačnim izvještajem o završenim radovima potvrditi da je sve izvršeno i da je funkcionalno.

UREĐENJE GRADILIŠTA

Izvođač radova dužan je prije početka radova da uredi prostor gradilišta i osigura da se radovi obavljaju u skladu s pravilima zaštite na radu prema elaboratu o uređenju gradilišta.

Izgrađene privremene građevine i postavljena oprema gradilišta moraju biti stabilni i odgovarati propisanim uslovima zaštite od požara i eksplozije, zaštite na radu i svim drugim mjerama zaštite radi sprečavanja ugrožavanja života i zdravlja ljudi.

Za privremeno zauzimanje javnih i saobraćajnih površina za potrebe gradilišta, izvođač je dužan obezbijediti odobrenje nadležnog tijela, odnosno poduzeća.

MATERIJALI I UREĐAJI

Ugrađeni materijali moraju biti ispravni i kvalitetni. Kvalitet ugrađenih materijala dokazuje se odgovarajućim potvrdama o usklađenosti.

Svi elementi, djelovi i oprema cjevovoda moraju odgovarati zahtjevima navedenim u specifikaciji materijala.

U Podgorici, Jun 2025 god.

Odgovorni inženjer:

Marko Đekić dipl.inž.maš.

Karakteristike i svojstva materijala i opreme

DAB PUMPS S. p. A.
Via Marco Polo, 14 - 35035 Mestrino (PD) - ITALY
Tel. +39 049 5125000 - Fax +39 049 5125950
Http://www.dabpumps.com

-
Phone

-

To the attention of

Sent:

Subject: **BOLNICA BP - INOVIRANI ODABIR**

Sincerely,

Phone
Cell.

DAB PUMPS S.p.A.
Via Marco Polo, 14 - 35035 Mestrino (PD), Italy
Tel. +39 049 5125000 - Fax +39 049 5125950
www.dabpumps.com

	Receiver	From
Company Reference Address Phone Fax E-mail		

Pos.no	Item no.	Description	Qty.
1		**1 KDN EN 12845 COMPACT (Q=484.7 H=52.21)**	
1.1	60174541	Centrifugal pump: 1 KDN 32-200/210 11kW EN 12845 T - JET 251 COMPACT	1

1 KDN 32-200/210 11kW EN 12845 T - JET 251 COMPACT

WORK DATA
Liquid : Water
Min. flow rate : 166.7 l/min
Total flow rate : 484.7 l/min
Head : 52.21 m
Field of application H(Qmax.) : 28.68 m
Field of application H(Qmin.) : 57.99 m
Field of application Q(max.): 898.3 l/min
Field of application Q(min.) : 166.7 l/min
Temperature : 20 °C
Operating pressure : 16 bar
Delivery diameter : 2 "
Intake diameter : DN 80
Motor type : 3~400 V/50 Hz

MOTOR
Rated power : 11 kW
Speed : 2930 1/min
Protection rating : IP 55

--UNIT WITH ELECTRIC PUMP--

MECHANICAL STRUCTURE

KDN normalised electric pump on bedplate painted red RAL 3000, pump body and impeller in cast iron (bronze impeller on request).
Coupled by means of flexible spacer coupling to asynchronous three-phase electric motor designed to deliver the max. power absorbed by the KDN pump. Electric pump control panel mounted on KDN pump bedplate.

HYDRAULIC STRUCTURE
Axial suction port. Eccentric diverter adapter (supplied as an accessory).
Max. flow rate of water at pump suction side 1.5 m/s (10.6.2.3)
Radial discharge port, with concentric diverter adapter, 2" connection for priming tank (only installations with suction lift), check valve, circuit with 2 start-up pressure switches, isolator valve (with manual DN125 reduction), discharge manifold painted red RAL 3000.

ELECTRIC PUMP CONTROL PANEL FUNCTIONS
The electric pump control panel, housed in an IP 55 metal enclosure, is equipped with the following components:
Interior of cabinet: main door lock disconnect switch,
fuses (max. current relays - motor protection cutouts are not permitted),
direct starters for pumps up to 7.5 kWatt,
star-delta starters for pumps above 7.5 kWatt,
24V control circuits transformer,
control circuits relay,
terminal board.
On front panel: electric pump control unit,
multifunction instrument with display (voltmeter, ammeter, alarms),
start and stop pushbuttons,
indicator lights,
indicator light with test pushbutton,
AUT - 0 - MAN selector with key removable in AUT position,
lamp test pushbutton.
Includes the following N.O. contacts on the terminal board, to be connected to our remote signals panel:
power/phase presence, pump start request, pump running, failed starting.
The panel is prearranged for installation of a GSM Modem (optional) so that pump unit alarm and/or functional status information can be sent by SMS mobile text messages.

COMPENSATION PUMP

DAB PUMPS S.p.A.
Via Marco Polo, 14 - 35035 Mestrino (PD), Italy
Tel. +39 049 5125000 - Fax +39 049 5125950
www.dabpumps.com

Receiver	From
Company Reference Address Phone Fax E-mail	

Pos.no	Item no.	Description	Qty.
		If present, a compensation pump connected to the electric motor pump or Diesel engine motor pump discharge manifold, complete with: ball valve on suction side, check valve and ball valve on discharge side, pressure switch, 20 litre expansion vessel, protection panel.	
1.2	-	Product version: 2 electric pumps + jockey 1 KDN 32-200/210 11kW EN 12845 T - JET 251 COMPACT WORK DATA Liquid : Water Min. flow rate : 166.7 l/min Total flow rate : 484.7 l/min Head : 52.21 m Field of application H(Qmax.) : 28.68 m Field of application H(Qmin.) : 57.99 m Field of application Q(max.): 898.3 l/min Field of application Q(min.) : 166.7 l/min Temperature : 20 °C Operating pressure : 16 bar Delivery diameter : 2 " Intake diameter : DN 80 Motor type : 3~400 V/50 Hz MOTOR Rated power : 11 kW Speed : 2930 1/min Protection rating : IP 55 —UNIT WITH ELECTRIC PUMP— MECHANICAL STRUCTURE KDN normalised electric pump on bedplate painted red RAL 3000, pump body and impeller in cast iron (bronze impeller on request). Coupled by means of flexible spacer coupling to asynchronous three-phase electric motor designed to deliver the max. power absorbed by the KDN pump. Electric pump control panel mounted on KDN pump bedplate. HYDRAULIC STRUCTURE Axial suction port. Eccentric diverter adapter (supplied as an accessory). Max. flow rate of water at pump suction side 1.5 m/s (10.6.2.3) Radial discharge port, with concentric diverter adapter, 2" connection for priming tank (only installations with suction lift), check valve, circuit with 2 start-up pressure switches, isolator valve (with manual DN125 reduction), discharge manifold painted red RAL 3000. ELECTRIC PUMP CONTROL PANEL FUNCTIONS The electric pump control panel, housed in an IP 55 metal enclosure, is equipped with the following components: Interior of cabinet: main door lock disconnect switch, fuses (max. current relays - motor protection cutouts are not permitted), direct starters for pumps up to 7.5 kWatt, star-delta starters for pumps above 7.5 kWatt, 24V control circuits transformer, control circuits relay, terminal board. On front panel: electric pump control unit, multifunction instrument with display (voltmeter, ammeter, alarms), start and stop pushbuttons, indicator lights, indicator light with test pushbutton, AUT - 0 - MAN selector with key removable in AUT position, lamp test pushbutton. Includes the following N.O. contacts on the terminal board, to be connected to our remote signals panel:	1

DAB PUMPS S.p.A.
Via Marco Polo, 14 - 35035 Mestrino (PD), Italy
Tel. +39 049 5125000 - Fax +39 049 5125950
www.dabpumps.com

	Receiver	From
Company Reference Address Phone Fax E-mail		

Pos.no	Item no.	Description	Qty.
		power/phase presence, pump start request, pump running, failed starting. The panel is prearranged for installation of a GSM Modem (optional) so that pump unit alarm and/or functional status information can be sent by SMS mobile text messages. COMPENSATION PUMP If present, a compensation pump connected to the electric motor pump or Diesel engine motor pump discharge manifold, complete with: ball valve on suction side, check valve and ball valve on discharge side, pressure switch, 20 litre expansion vessel, protection panel.	
1.3	60174396	Accessories: 1 KDN 32-200/210 11kW EN 12845 T COMPACT	1
1.4	60199937	Accessories: Coupling KIT 2KDN 32 EN COMPACT Coupling KIT 2KDN 32 EN COMPACT Only in the case of units comprising two modules (electric pump and/or Diesel pump) 1 coupling KIT is required. Components painted red RAL 3000.	1
1.5	60124053	Accessories: SUCTION KIT KDN 32 - NKV 15-20 EN12845 (DN80) SUCTION KIT KDN 32 - NKV 15-20 EN12845 (DN80) The kit is composed of an eccentric cone with screws, nuts and seals. It maintains the water speed in suction below 1.5 m/s and prevents the formation of air pockets. 1 SUCTION KIT is required for each pump set.	2
1.6	002789104	Accessories: Flowmeter T 50 DN 50 (7-50 m^3/h)	1
1.7	002132609	Accessories: Butterfly valve DN 80 Butterfly valve DN 80 These are required to allow pump maintenance to be carried out in the case of flooded suction type installations. 1 BUTTERFLY VALVE is required for each 1 KDN set (electric or Diesel). 1 VALVE for units 1NKV and 2 VALVES for units 2NKV.	2

DAB PUMPS S.p.A.
Via Marco Polo, 14 - 35035 Mestrino (PD), Italy
Tel. +39 049 5125000 - Fax +39 049 5125950
www.dabpumps.com

Receiver

Company
Reference
Address
Phone
Fax
E-mail

From

Item n° : 60174541

Customer pos. no.:

Model :

1 KDN 32-200/210 11kW EN 12845 T - JET 251 COMPACT

2 electric pumps + jockey

Pump data

MEI ≥ 0,60

Pressure rating :	PN16
Min. fluid temperature :	0 °C
Max. fluid temperature :	40 °C
Max. Ambient temperature :	40 °C

Requested data

Flow :	450.00 l/min
Head :	45.00 m
Fluid :	Water
Fluid Temperature :	20 °C
Density :	998.3 kg/m³
Kinematic viscosity :	1.005 mm²/s
Vapor pressure :	2.34 kPa

Hydraulic data (duty point)

Flow :	484.72 l/min
Head :	52.211 m

Motor data main pump:

Nominal power P2 :	11 kW
Rated speed :	2930 1/min
Rated voltage :	400 V
Rated current (subject to change) :	19.4 A

Motor data jockey pump: - JET 251

Nominal power P2 :	1.85 kW
Rated voltage :	400 V
Rated current (subject to change) :	4 A

Materials

Pump body	Cast iron 250 UNI ISO 185
Impeller	Cast iron 250 UNI ISO 185
Pump shaft	AISI 420 - UNI 6900/71
Mechanical seal	Carbon/Silicon carbide
O-Ring	Ethylene propylene (EPDM)
Seal disk	Cast iron 250 UNI ISO 185
Seal spacer	AISI 304 - UNI 6900/71
Baseplate	Painted steel red RAL 3000
Pump body (jockey pump)	Cast iron 200 UNI ISO 185
Support (jockey pump)	Cast iron 200 UNI ISO 185
Impeller (jockey pump)	Technopolymer A
Shaft with rotor (jockey pump)	AISI 416 X12 CrS 13 UNI 6900/71
Mechanical seal (jockey pump)	Carbon/Ceramic
O-Ring (jockey pump)	NBR Rubber
Diffuser (jockey pump)	Technopolymer A

Dimensions in mm

A	1120	H2	1087		
A max	1358	H3	213		
A1	223				
A2	60				
DNA	80				
DNM	2"				
H	1500				
H1	225				

Weight : 748 kg

Curve tolerance according to ISO 9906

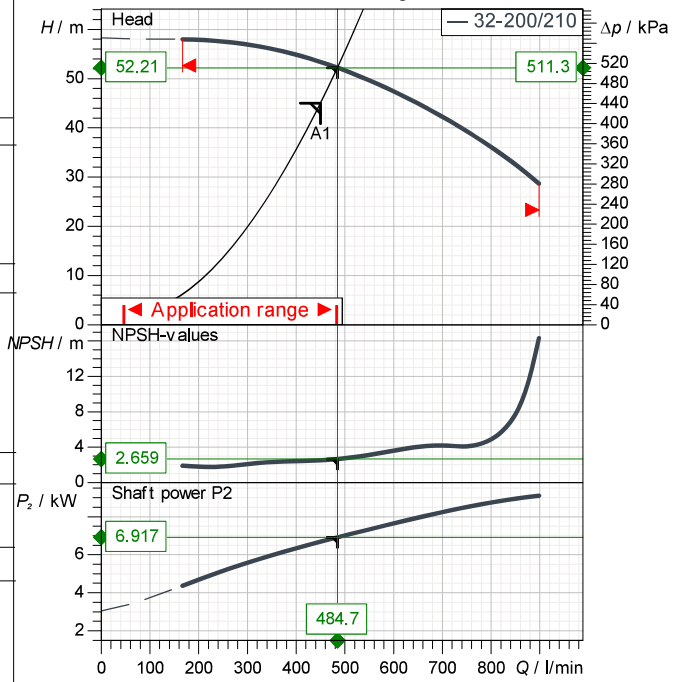

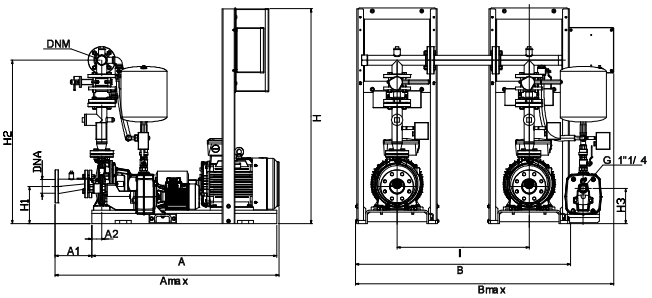

Hydraulic connection

Suction side (Suction Kit) DNA :	DN 80	/	PN16
Discharge side (Discharge manifold) DNM :	2"	/	PN 16

The Jockeypump (if present) is always fitted to the skid of the service pump.

DAB PUMPS reserves the right to make modifications without notice

PERFORMANCE CURVES

2025-05-28

DAB PUMPS S.p.A.
Via Marco Polo, 14 - 35035 Mestrino (PD), Italy
Tel. +39 049 5125000 - Fax +39 049 5125950
www.dabpumps.com

	Receiver	From
Company		
Reference		
Address		
Phone		
Fax		
E-mail		

1 KDN 32-200/210 11kW EN 12845 T - JET 251 COMPACT

Curve tolerance according to ISO 9906

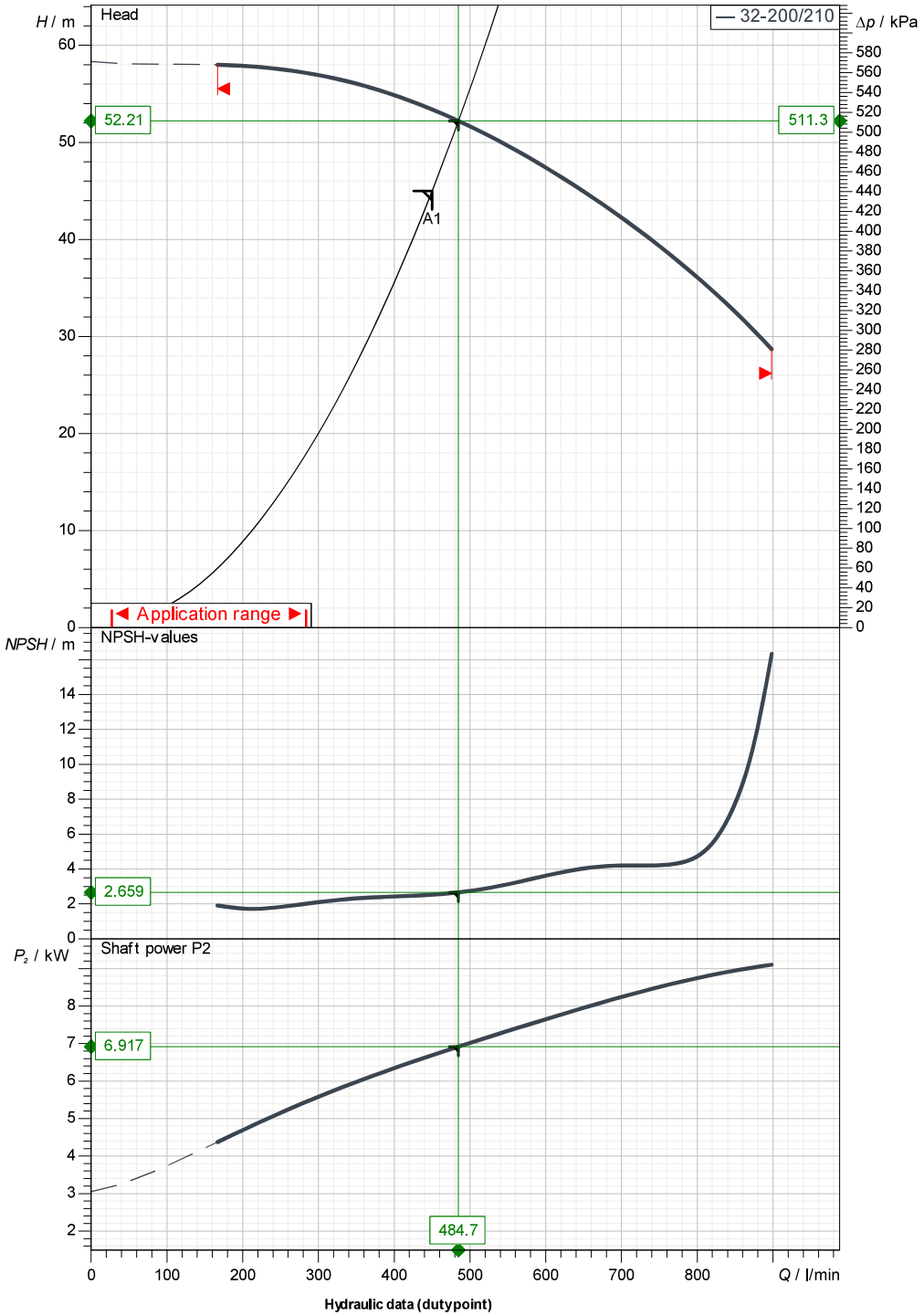

Hydraulic data (dutypoint)

Suction side :	Discharge side :	Flow :	Head :	Rated speed :
DN 80 PN16	2 " PN 16	450 l/min	45 m	2930 1/min

MAIN_PROJECT_TITLE	BUSINESS_PROCESS_ID	OWNER_	ISSUE_DATE
	BOLNICA BP - INOVIRANI ODABIR		**2025-05-28**

DAB PUMPS reserves the right to make modifications without notice

DIMENSIONAL DRAWING

2025-05-28

DAB PUMPS S.p.A.
Via Marco Polo, 14 - 35035 Mestrino (PD), Italy
Tel. +39 049 5125000 - Fax +39 049 5125950
www.dabpumps.com

Receiver	From
Company Reference Address Phone Fax E-mail	

1 KDN 32-200/210 11kW EN 12845 T - JET 251 COMPACT

2 Elettropompe + pilota

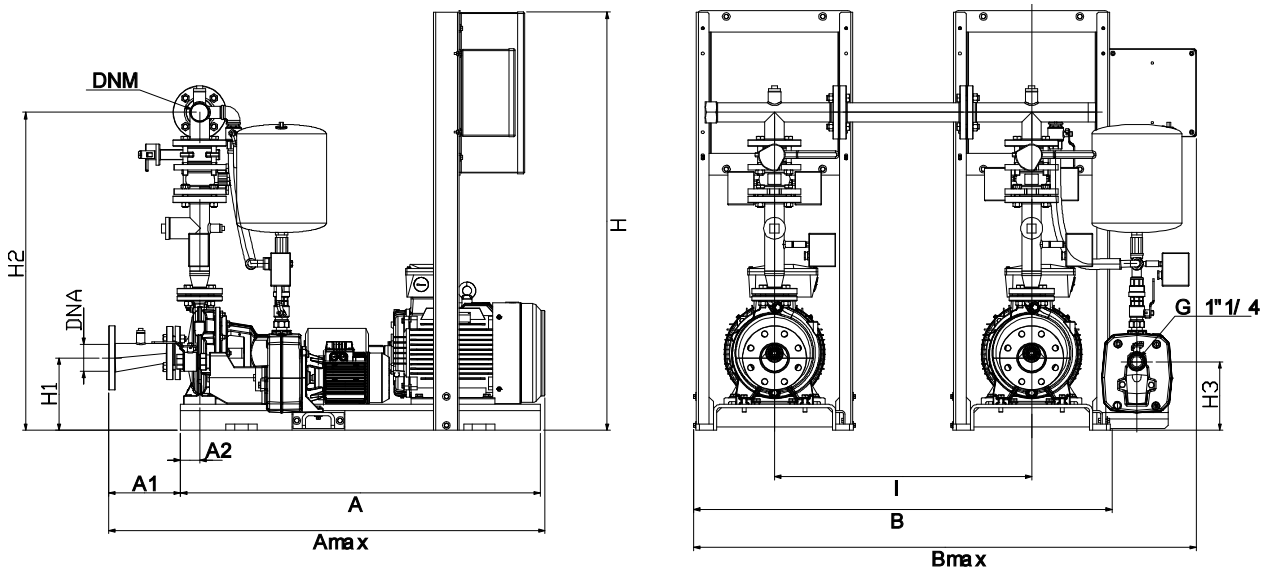

The Jockey pump (if present) is always fitted to the skid of the service pump.

	Dimensions in mm							Hydraulic connection
1	A	1120						Suction side (Suction Kit) DNA :
2	A max	1358						DN 80
3	A1	223						PN16
4	A2	60						
5	DNA	80						
6	DNM	2"						
7	H	1500						Discharge side (Discharge manifold) DNM :
8	H1	225						2 "
9	H2	1087						PN 16
10	H3	213						
11								
12								

MAIN_PROJECT_TITLE	BUSINESS_PROCESS_ID	OWNER_	ISSUE_DATE
	BOLNICA BP - INOVIRANI ODABIR		2025-05-28

DAB PUMPS reserves the right to make modifications without notice

Company name:
Created by:
Phone:

Date: 26/05/2025

Qty.	Description
1	**SEG.40.12.2.50B**

Note! Product picture may differ from actual product

Product No.: 96075905

Grundfos SEG grinder pumps are non-self-priming, single-stage, centrifugal pumps with horizontal discharge port, specifically designed for pumping wastewater containing discharge from toilets. The pump is equipped with a grinder system that grinds destructible solids into small pieces to lead them through pipes with a relatively small diameter.

SEG grinder pumps are ideal for use in sparsely populated areas, where gravity sewage systems are not available. Examples include villages, farm areas and areas with large terrain-level differences, where a pressurised system has advantages.

The pump is available for two types of installation:

- submerged installation on auto-coupling systems
- submerged installation, free-standing.

The pump is made of wear-resistant materials, such as cast iron and stainless steel.

These materials ensure reliable operation.

The surface of the pump is smooth to prevent dirt and impurities from sticking.

The corrosion-resistant stainless steel clamp is securing the motor to the pump housing and allow the easy service of the pump.

SmartTrim system allows easy adjustment of the impeller clearance to ensure maximum efficiency during the pump lifespan.

The range is designed to reduce energy consumption and keep downtime costs to a minimum, while maintaining peak performance throughout the lifespan of the system.

Controls:

Moisture sensor:	without moisture sensors
AUTOADAPT:	No

Liquid:

Liquid temperature range:	0 .. 40 °C
Selected liquid temperature:	20 °C
Density:	998.2 kg/m³

Technical:

Actual calculated flow:	4900 l/h
Resulting head of the pump:	19.04 m
Type of impeller:	GRINDER SYSTEM
Primary shaft seal:	SIC/SIC
Approvals:	PA-I
Curve tolerance:	ISO9906:2012 3B2

Materials:

Pump housing:	Cast iron EN1561 EN-GJL-200
Impeller:	Cast iron EN1561 EN-GJL-200

Installation:

Company name:
Created by:
Phone:

Date: 26/05/2025

Qty.	Description	
1	Maximum ambient temperature:	40 °C
	Maximum operating pressure:	6 bar
	Flange standard:	DIN
	Pipework connection:	DN 40/50
	Pump outlet:	DN 40
	Pressure rating:	PN 10
	Maximum installation depth:	7 m
	Auto-coupling:	96076063
	Electrical data:	
	Power input - P1:	1.6 kW
	Rated power - P2:	1.2 kW
	Mains frequency:	50 Hz
	Rated voltage:	3 x 400-415 V
	Voltage tolerance:	+6/-10 %
	Max starts per hour:	30
	Rated current:	3 A
	Starting current:	21 A
	Rated current at no load:	2.1 A
	Cos phi - power factor:	0.81
	Cos phi - p.f. at 3/4 load:	0.72
	Cos phi - p.f. at 1/2 load:	0.58
	Rated speed:	2750 rpm
	Moment of inertia:	0.0038 kg m²
	Motor efficiency at full load:	73 %
	Motor efficiency at 3/4 load:	71 %
	Motor efficiency at 1/2 load:	66 %
	Number of poles:	2
	Start. method:	direct-on-line
	Enclosure class (IEC 34-5):	IP68
	Insulation class (IEC 85):	F
	Explosion proof:	no
	Length of cable:	10 m
	Cable type:	07RN8-F
	Type of cable plug:	No plug
	Others:	
	Net weight:	33 kg
	Danish VVS No.:	391342131
	Swedish RSK No.:	5885829
	Finnish LVI No.:	4836103
	Norwegian NRF no.:	9045801
	Country of origin:	HU
	Custom tariff no.:	84137021

Company name:
Created by:
Phone:

Date: 26/05/2025

96075905 SEG.40.12.2.50B 50 Hz

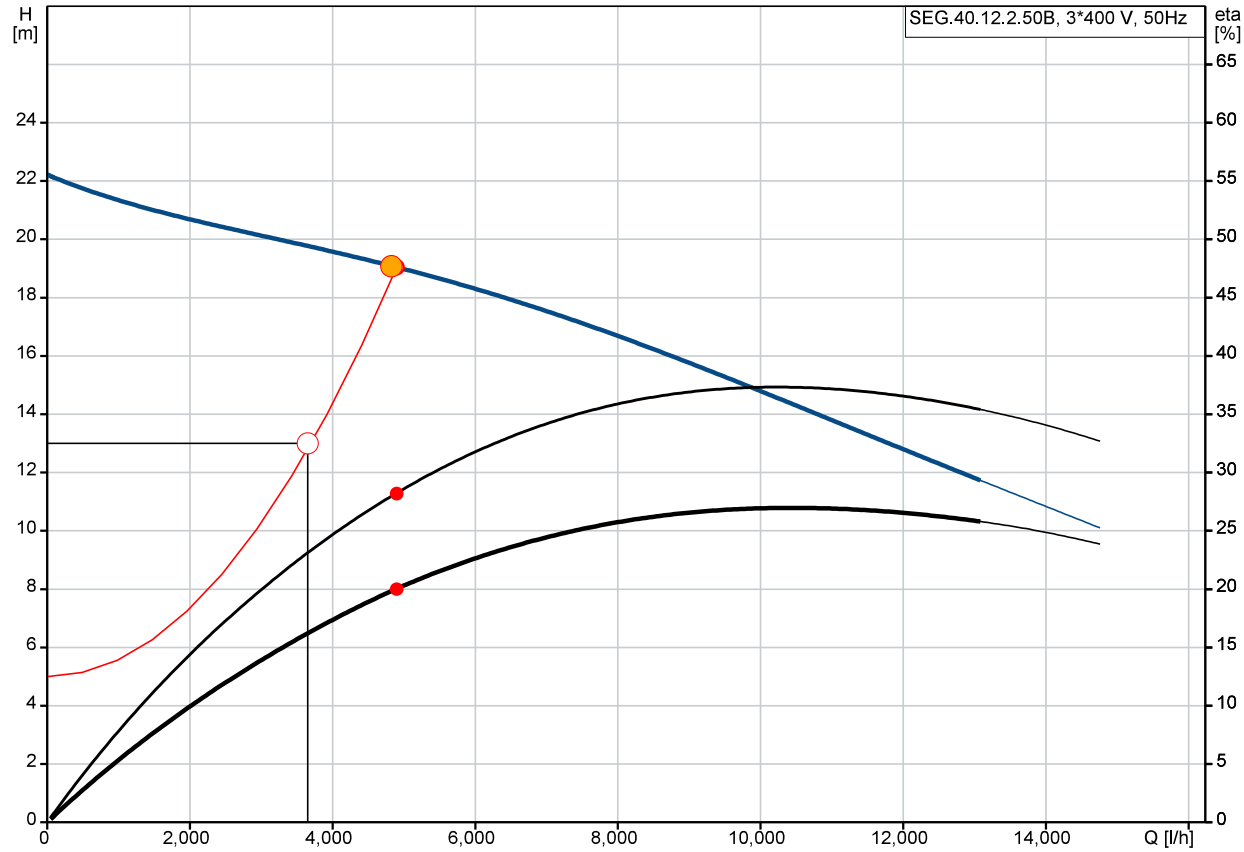

Q = 4900 l/h
H = 19.04 m
Liquid temperature during operation = 20 °C
Eta pump = 28.2 %
Eta pump+motor = 20 %

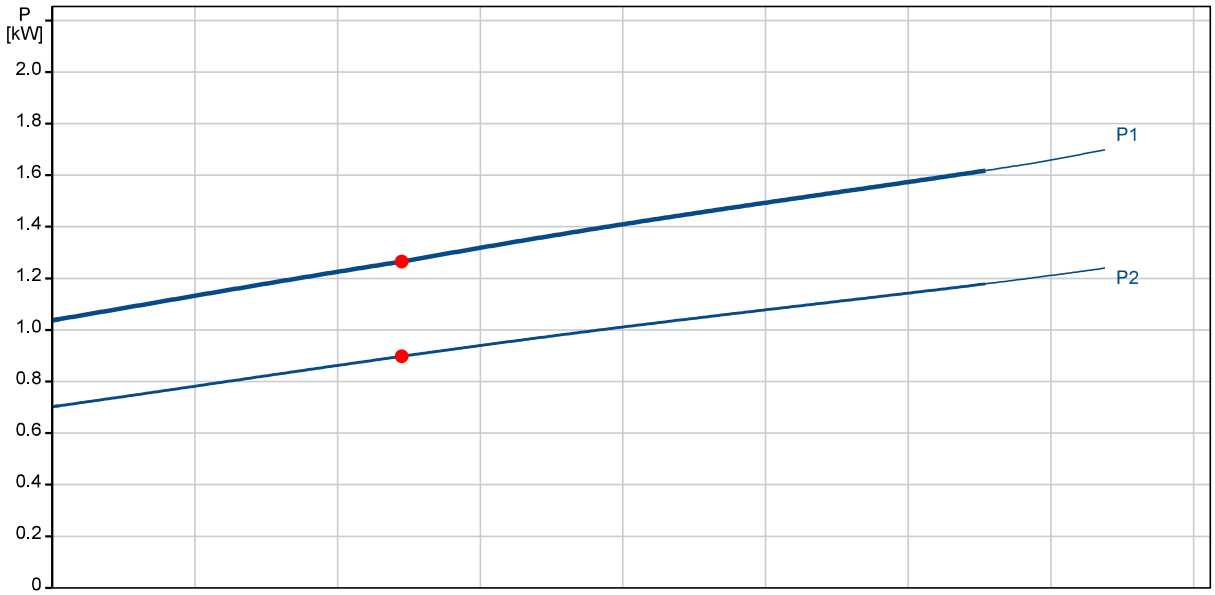

P1 = 1.265 kW
P2 = 0.898 kW

Company name:
Created by:
Phone:

Date: 26/05/2025

96075905 SEG.40.12.2.50B 50 Hz

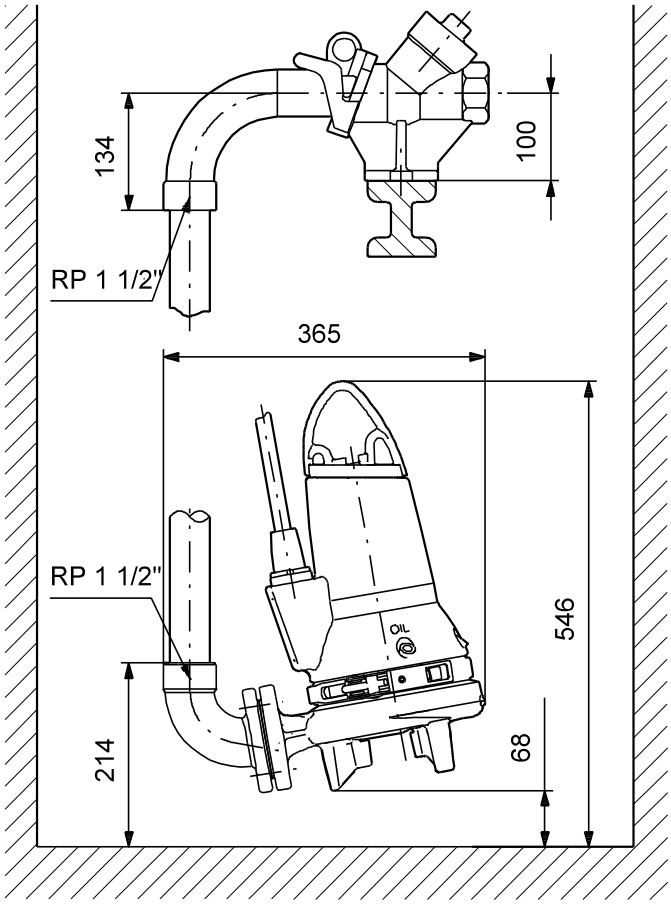

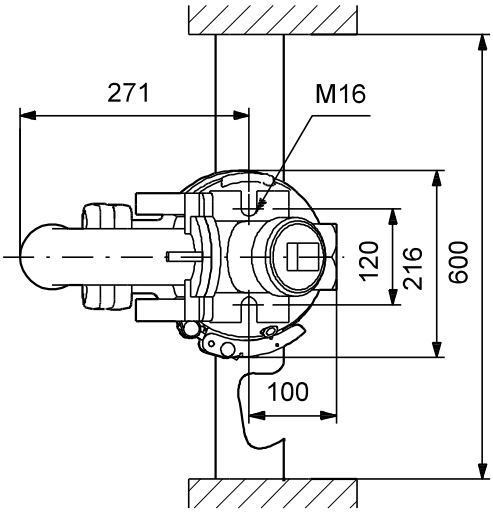

Note! All units are in [mm] unless others are stated.
Disclaimer: This simplified dimensional drawing does not show all details.

Company name:
Created by:
Phone:

Date: 26/05/2025

96075905 SEG.40.12.2.50B 50 Hz

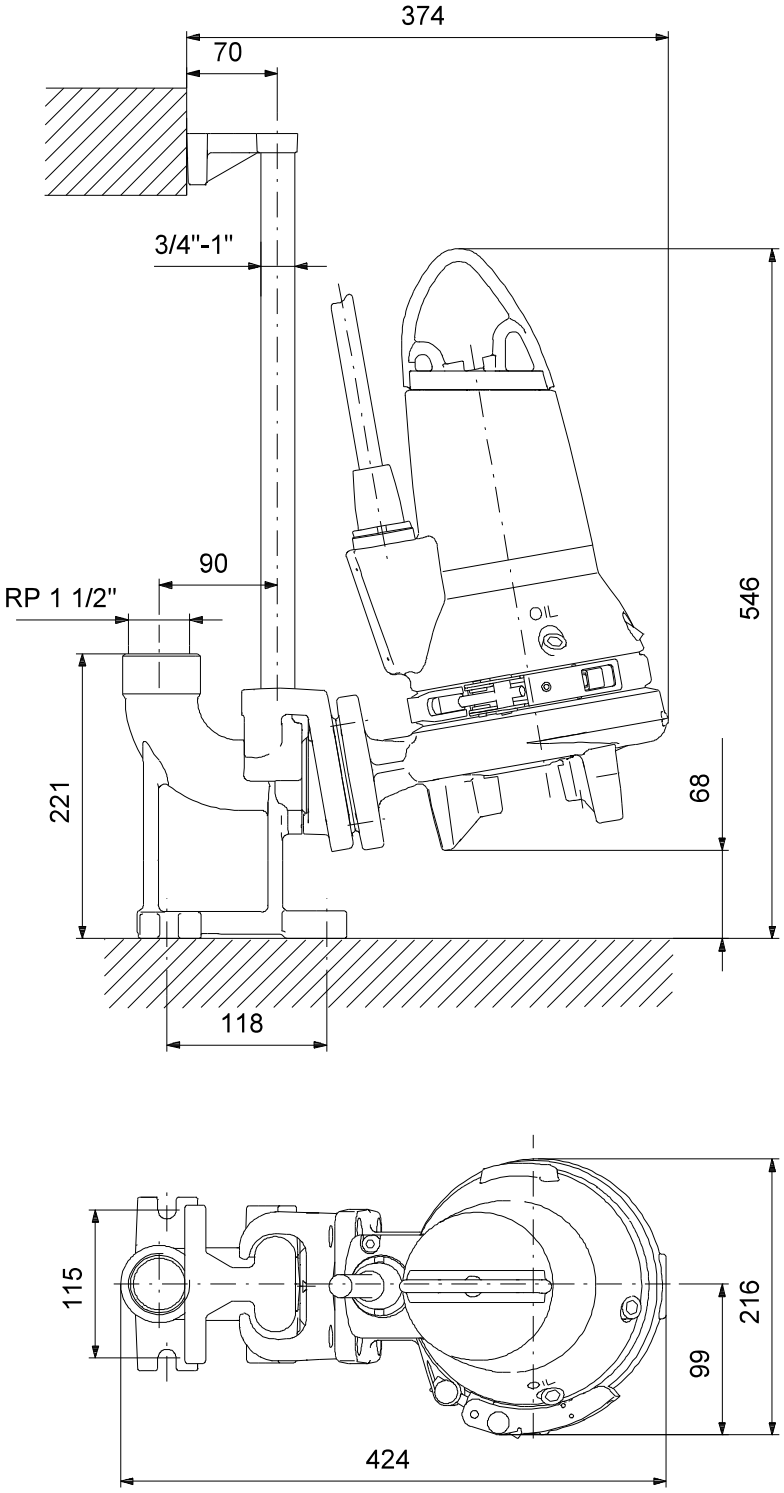

Note! All units are in [mm] unless others are stated.
Disclaimer: This simplified dimensional drawing does not show all details.

Company name:
Created by:
Phone:

Date: 26/05/2025

96075905 SEG.40.12.2.50B 50 Hz

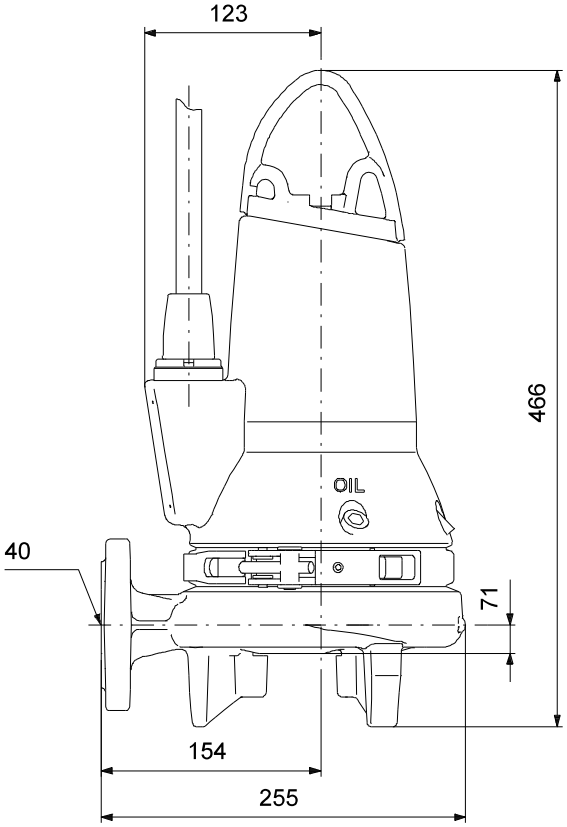

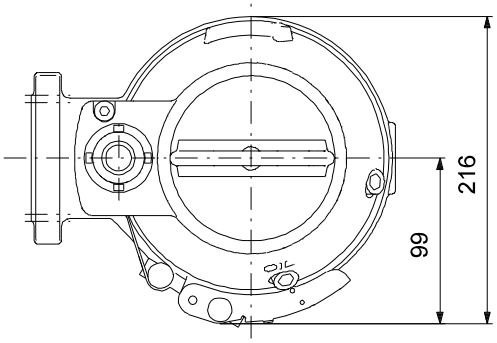

Note! All units are in [mm] unless others are stated.
Disclaimer: This simplified dimensional drawing does not show all details.

Company name:
Created by:
Phone:

Date: 26/05/2025

96075905 SEG.40.12.2.50B 50 Hz

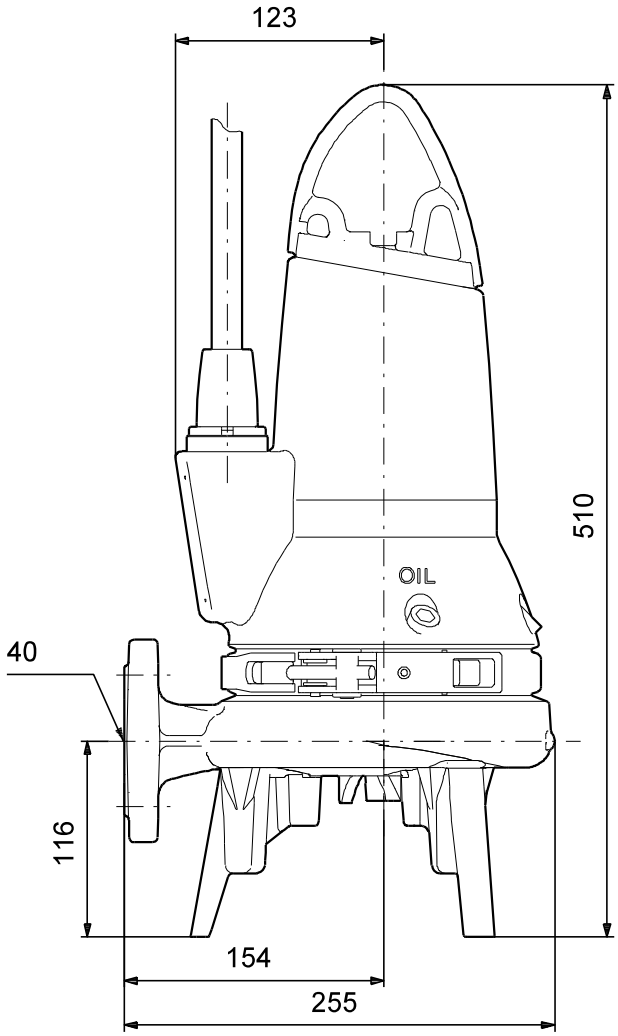

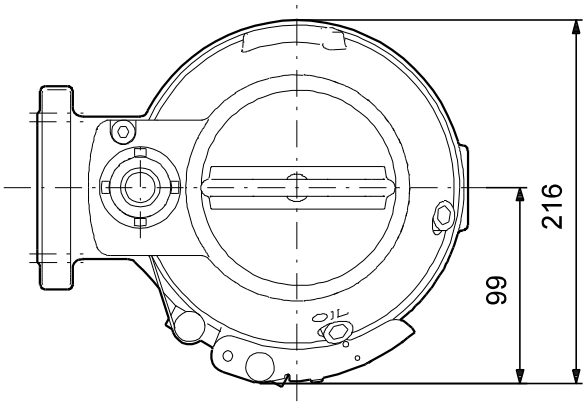

Note! All units are in [mm] unless others are stated.
Disclaimer: This simplified dimensional drawing does not show all details.

Company name:
Created by:
Phone:

Date: 26/05/2025

96075905 SEG.40.12.2.50B 50 Hz

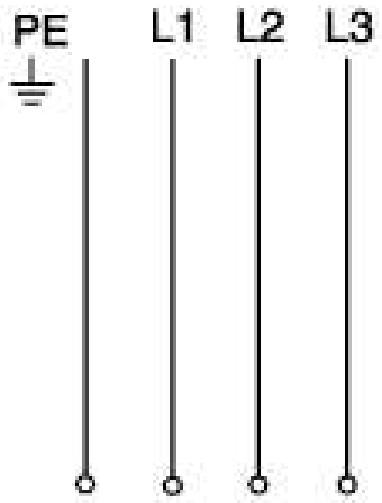

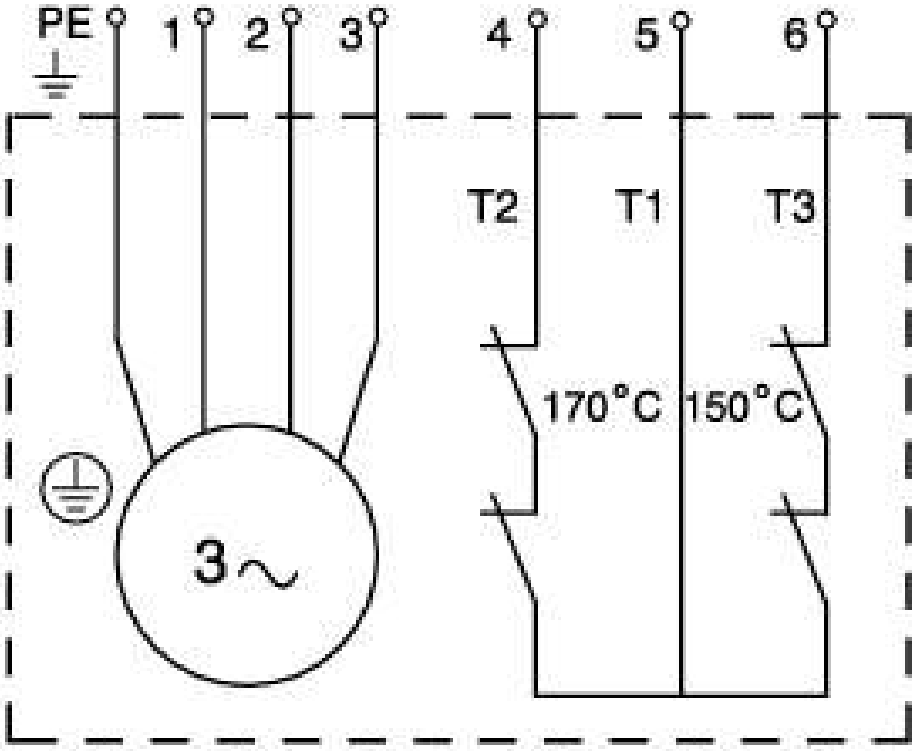

Note! All units are in [mm] unless others are stated.

VIKING®	TECHNICAL DATA	MICROMATIC® STANDARD RESPONSE PENDENT SPRINKLER VK102 (K5.6)

The Viking Corporation, 210 N Industrial Park Drive, Hastings MI 49058
Telephone: 269-945-9501 Technical Services: 877-384-5464 Fax: 269-818-1680 Email: techsvcs@vikingcorp.com
Visit the Viking website for the latest edition of this technical data page www.vikinggroupinc.com

1. DESCRIPTION

The Viking Micromatic® Standard Response Pendent VK102 Sprinkler is a small, thermosensitive, glass-bulb spray sprinkler available in several different finishes and temperature ratings to meet design requirements. The special Polyester, and Electroless Nickel PTFE (ENT) coatings can be used in decorative applications where colors are desired. In addition, these coatings have been investigated for installation in corrosive environments and are listed/approved as indicated in the Approval Charts.

Viking standard response sprinklers may be ordered and/or used as open sprinklers (glass bulb and pip cap assembly removed) on deluge systems. Refer to Ordering Instructions.

WARNING: Cancer and Reproductive Harm- www.P65Warnings.ca.gov

2. LISTINGS AND APPROVALS

cULus Listed: Category VNIV

FM Approved: Classes 2001, 2002, 2015, 2017, 2043

VdS Approved: Certificate G414006 & G414004

LPCB Approved

CE: Standard EN 12259-1, DOP_Sprinklers_LPCB_5-2-19 & DOP_VK102WAX_2-12-19

MED Certified: Standard EN 12259-1, EC-certificate 0832-MED-1003

China Approval: Approved according to China GB standard.

NOTE: Other International approval certificates are available upon request.
Refer to Approval Charts and Design Criteria for listing and approval requirements that must be followed.

3. TECHNICAL DATA

Specifications:
Minimum Operating Pressure: 7 psi (0.5 bar)*
Maximum Working Pressure: 175 psi (12 bar) wwp
Factory tested hydrostatically to 500 psi (34.5 bar)
Thread size: 1/2” NPT, 15 mm BSPT
Nominal K-factor: 5.6 U.S. (80.6 metric**)
Glass-bulb fluid temperature rated to -65 °F (-55 °C)
Overall Length: 2-1/4” (57 mm)

* cULus Listing, FM Approval, and NFPA 13 installs require a minimum of 7 psi (0.5 bar). The minimum operating pressure for LPCB and CE Approvals ONLY is 5 psi (0.35 bar).

** Metric K-factor measurement shown is in Bar. When pressure is measured in kPa, divide the metric K-factor shown by 10.0.

Material Standards:
Frame Casting: Brass UNS-C84400 or QM Brass
Deflector: Phosphor Bronze UNS-C51000 (Not for FM Approval) or Copper UNS-C19500
Bulb: Glass, nominal 5 mm diameter
Belleville Spring Sealing Assembly: Nickel Alloy, coated on both sides with PTFE Tape
Screw: Brass UNS-C36000
Pip Cap and Insert Assembly: Copper UNS-C11000 and Stainless Steel UNS-S30400
For Polyester Coated Sprinklers: Belleville Spring-Exposed
For ENT coated Sprinklers: Belleville Spring - Exposed, Screw and Pipcap - ENT plated.
Ordering Information: Refer to Table 1

4. INSTALLATION

Refer to appropriate NFPA Installation Standards.

5. OPERATION

During fire conditions, the heat-sensitive liquid in the glass bulb expands, causing the glass to shatter, releasing the pip cap and sealing spring assembly. Water flowing through the sprinkler orifice strikes the sprinkler deflector, forming a uniform spray pattern to extinguish or control the fire.

6. INSPECTIONS, TESTS AND MAINTENANCE

Refer to NFPA 25 for Inspection, Testing and Maintenance requirements.

VIKING®	TECHNICAL DATA	MICROMATIC® STANDARD RESPONSE PENDENT SPRINKLER VK102 (K5.6)

The Viking Corporation, 210 N Industrial Park Drive, Hastings MI 49058
Telephone: 269-945-9501 Technical Services: 877-384-5464 Fax: 269-818-1680 Email: techsvcs@vikingcorp.com
Visit the Viking website for the latest edition of this technical data page www.vikinggroupinc.com

7. AVAILABILITY

The Viking Micromatic® Standard Response Upright Sprinkler VK100 is available through a network of domestic and international distributors. See The Viking Corporation web site for the closest distributor or contact The Viking Corporation.

8. GUARANTEE

For details of warranty, refer to Viking's current list price schedule or contact Viking directly.

Figure 1: Sprinkler Wrenches

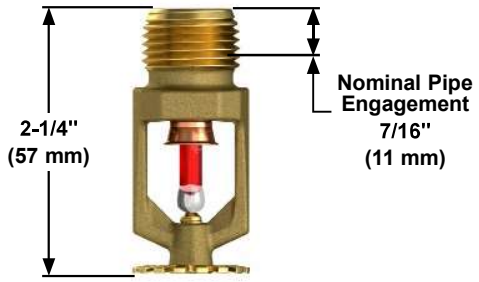

Figure 2: Sprinkler Dimensions

VIKING®	TECHNICAL DATA	MICROMATIC® STANDARD RESPONSE PENDENT SPRINKLER VK102 (K5.6)

The Viking Corporation, 210 N Industrial Park Drive, Hastings MI 49058
Telephone: 269-945-9501 Technical Services: 877-384-5464 Fax: 269-818-1680 Email: techsvcs@vikingcorp.com
Visit the Viking website for the latest edition of this technical data page www.vikinggroupinc.com

TABLE 1: ORDERING INFORMATION

Instructions: Using the sprinkler base part number,
(1) add the suffix for the desired Finish
(2) add the suffix for the desired Temperature Rating.

Sprinkler Base Part No.	Size		1: Finishes		2: Temperature Ratings				
	NPT Inch	BSPT mm	Description	Suffix[1]	Nominal Rating	Bulb Color	Hazard Classification	Max. Ambient Ceiling Temperature[2]	Suffix
12987	1/2	--	Brass	A	135 °F (57 °C)	Orange	Ordinary	100 °F (38 °C)	A
12989	--	15	Chrome	F	155 °F (68 °C)	Red	Ordinary	100 °F (38 °C)	B
20229	--	15	White Polyester [3,5]	M-/W	175 °F (79 °C)	Yellow	Intermediate	150 °F (65 °C)	D
			Black Polyester [3,5]	M-/B	200 °F (93 °C)	Green	Intermediate	150 °F (65 °C)	E
			Wax	C	212 °F (100 °C)	Green	Intermediate	150 °F (65 °C)	M
			Wax over Polyester	V-/W	286 °F (141 °C)	Blue	High	225 °F (107 °C)	G
			ENT [3,4,5]	JN	360 °F (182 °C)	Mauve	Extra High	300 °F (149 °C)	H
					500 °F (260 °C)	Black	Ultra High[6]	465 °F (240 °C)	L

Example: 12987MB/W = VK102 with White Polyester Finish and 155 °F (68 °C) Nominal temperature rating. This sprinkler is to be installed into an area with a maximum ambient temperature of 100 °F (38 °C) meaning if the area will experience temperatures above the maximum ambient rating, you shall use a higher temperature-rated sprinkler.

Corrosion Resistant Coatings[5]

- White Polyester and Black Polyester in all temperature ratings.
- ENT in all temperature ratings except 135 °F (57 °C).
- Wax-Coated Brass and Wax over Polyester[7] for sprinklers with the following temperature ratings:
  155 °F (68 °C) Lt. Brown Wax | 175 °F (79 °C) Brown Wax | 200 °F (93 °C) Brown Wax | 286 °F (141 °C) Dk. Brown Wax[7]

Accessories

Sprinkler Wrenches (see Figure 1):

A. Standard Wrench: Part No. 21475M/B
B. Standard Wrench for Wax Coated Sprinklers: Part No. 10896W/B
C. Socket Wrench for Recessed Pendent Sprinklers: Part No. 13655W/B (A 1/2" ratchet is required, not available from Viking)
D. Socket Wrench for Wax Coated Sprinklers: Part No. 13577W/B (A 1/2" ratchet is required, not available from Viking)
E. Optional Protective Sprinkler Cap Remover/Escutcheon Installer Tool[9]: Part No. 15915

Sprinkler Cabinet:

A. Up to 6 sprinklers: Part number 01724A (available since 1971).
B. 6-12 Sprinklers: Part number 01725A (available since 1971).

Footnotes

1. Where a dash (-) is shown in the Finish suffix designation, insert the desired Temperature Rating suffix. See example above.
2. Based on NFPA 13, NFPA 13R, and NFPA 13D. Other limits may apply, depending on fire loading, sprinkler location, and other requirements of the Authority Having Jurisdiction. Refer to specific installation standards.
3. UL Listed as corrosion resistant.
4. FM Approved corrosion resistant.
5. The corrosion resistant and corrosion proofing coatings have passed the standard corrosion test required by the approving agencies indicated in the Approval Chart(s). These tests cannot and do not represent all possible corrosive environments. Prior to installation, verify through the end-user that the coatings are compatible with or suitable for the proposed environment. For automatic sprinklers, the coatings indicated are applied to the exposed exterior surfaces only. Note that the spring is exposed on sprinklers with Polyester and ENT coatings. For ENT coated automatic sprinklers, the waterway is coated.
6. Sprinklers of Ultra-High temperature rating are intended for use inside ovens, dryers, or similar enclosures with normal operating temperatures above 300 °F (149 °C). Where the ambient temperature around the Ultra-High temperature rated sprinkler is significantly reduced below 300 °F (149 °C), response time may be severely retarded.
7. Wax melting point is 170 °F (76 °C) for 286 °F (141 °C) temperature rated sprinklers. For more inforamation regarding wax coatings, refer to Bulletin Form No. F_010201.
8. Allows use from the floor by attaching a length of 1" diameter CPVC tubing to the tool. Ideal for sprinkler cabinets. Refer to Bulletin F_051808.

VIKING®

TECHNICAL DATA

MICROMATIC® STANDARD RESPONSE PENDENT SPRINKLER VK102 (K5.6)

The Viking Corporation, 210 N Industrial Park Drive, Hastings MI 49058
Telephone: 269-945-9501 Technical Services: 877-384-5464 Fax: 269-818-1680 Email: techsvcs@vikingcorp.com
Visit the Viking website for the latest edition of this technical data page www.vikinggroupinc.com

Approval Chart 1 (UL)

Micromatic® Standard Response Pendent Sprinkler VK102
Maximum 175 PSI (12 bar) WWP

KEY: A1X — Temperature, Finish, Escutcheon (if applicable)

Sprinkler Base Part Number[1]	SIN	Thread Size		Nominal K-factor		Overall Length		Listings and Approvals[3] (Refer also to UL Design Criteria.)					
		NPT	BSPT	U.S.	metric[2]	Inches	mm	cULus[4]	VdS	LPCB	CE[8]	MED[9]	China Approval
12987	VK102	1/2”	15 mm	5.6	80.6	2-1/4”	57	A1, B3, B1Y, C4, D2, E5, G5Z	A1	A1, B3, B1Y	F1, G1Y, B4[12]	F2X	--
12989	VK102	--	15 mm	5.6	80.6	2-1/4”	57	A1, B3, B1Y, C4, D2, E5, G5Z	A1	A1, B3, B1Y	F1, G1Y, B4[12]	F2X	--
20229[10]	VK102	--	15 mm	5.6	80.6	2-1/4”	57	E6	--	--	--	--	E6
NOTICE - Product Below - No longer offered.													
10139	VK102	1/2”	15 mm	5.6	80.6	2-1/4”	57	A1, B3, B1Y, C4, D2, E5, G5Z	--	--	--	--	--
10173	VK102	--	15 mm	5.6	80.6	2-1/4”	57	A1, B3, B1Y, C4, D2, E5, G5Z	A1	A1, B3, B1Y	--	F2X	--
18020	VK102	1/2”	15 mm	5.6	80.6	2-1/4”	57	A1, B3, B1Y, C4, D2, E5, G5Z	A1	A1, B3, B1Y	F1, G1X	F2X	--

Approved Temperature Rating Codes

A = 135 °F (57 °C), 155 °F (68 °C), 175 °F (79 °C), 200 °F (93 °C), 286 °F (141 °C), and 360 °F (182 °C)
B = 135 °F (57 °C), 155 °F (68 °C), 175 °F (79 °C), and 200 °F (93 °C)
C = 286 °F (141 °C)
D = 500 °F (260 °C)[7]
E = 155 °F (68 °C), 175 °F (79 °C), 200 °F (93 °C), 286 °F (141 °C), 360 °F (182 °C), and 500 °F (260 °C)[7]
F = 155 °F (68 °C), 175 °F (79 °C), 200 °F (93 °C), 286 °F (141 °C), and 360 °F (182 °C)
G = 155 °F (68 °C), 175 °F (79 °C), and 200 °F (93 °C)

Approved Finish Codes

1 = Brass, Chrome, White Polyester[5,6] and Black Polyester[5,6]
2 = Brass and Chrome
3 = Wax-Coated Brass and Wax Over Polyester[5]
4 = High Temperature 200 °F (93 °C) Wax Coating (corrosion resistant); maximum ambient temperature allowed at ceiling = 150 °F (65 °C)
5 = ENT[5]
6 = Chrome

Approved Escutcheon Codes

X = Recessed with the Viking Model E-1, E-2, or E-3 Recessed Escutcheon
Y = Standard surface-mounted escutcheon or recessed with the Viking Model E-1, E-2, or E-3 Recessed Escutcheon
Z = Standard surface-mounted escutcheon or recessed with the Viking Model E-1 Recessed Escutcheon

Footnotes

1. Base part number is shown. For complete part number, refer to Viking’s current price schedule.
2. Metric K-factor shown is for use when pressure is measured in bar. When pressure is measured in kPa, divide the metric K-factor shown by 10.0.
3. This table shows the listings and approvals available at the time of printing. Check with the manufacturer for any additional approvals.
4. Listed by Underwriters Laboratories Inc. for use in the U.S. and Canada.
5. cULus Listed as corrosion resistant.
6. Other colors are available on request with the same Listings and Approvals as the standard colors.
7. Sprinklers of Ultra-High temperature rating are intended for use inside ovens, dryers, or similar enclosures with normal operating temperatures above 300 °F (149 °C). Where the ambient temperature around the Ultra-High temperature rated sprinkler is significantly reduced below 300 °F (149 °C), the response time of the Ultra-High temperature rated sprinkler may be severely retarded.
8. CE: Standard EN 12259-1, EC-certificate of conformity 0832-CPD-0021.
9. MED Certified, Standard EN 12259-1, EC-certificate of conformity 0832-MED-1003 and 0832-MED-1008.
10. Approved according to China GB standard.
11. CE: Standard EC 12259-1, Declaration of Performance DOP_Sprinklers_LPCB_5-2-19 & DOP_VK102WAX_2-12-19

TECHNICAL DATA

MICROMATIC® STANDARD RESPONSE PENDENT SPRINKLER VK102 (K5.6)

The Viking Corporation, 210 N Industrial Park Drive, Hastings MI 49058
Telephone: 269-945-9501 Technical Services: 877-384-5464 Fax: 269-818-1680 Email: techsvcs@vikingcorp.com
Visit the Viking website for the latest edition of this technical data page www.vikinggroupinc.com

Approval Chart 2 (FM)

Micromatic® Standard Response Pendent Sprinkler VK102
Maximum 175 PSI (12 bar) WWP

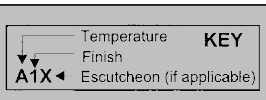

Sprinkler Base Part Number[1]	SIN	Thread Size		Nominal K-Factor		Overall Length		FM Approvals[3] (Refer also to Design Criteria below.)
		NPT	BSPT	U.S.	metric[2]	Inches	mm	
12987	VK102	1/2”	15 mm	5.6	80.6	2-1/4”	57	A1, B2, C3, D1, E4, G1Y, G4Z
12989	VK102	--	15 mm	5.6	80.6	2-1/4”	57	A1, B2, C3, D1, E4, G1Y, G4Z
20229[7]	VK102	--	15 mm	5.6	80.6	2-1/4”	57	E5
NOTICE - Product Below - Limited Availability (Contact Local Viking Office)								
10139	VK102	1/2”	15 mm	5.6	80.6	2-1/4”	57	A1, B2, C3, D1, E4, G1Y, G4Z
10173	VK102	--	15 mm	5.6	80.6	2-1/4”	57	A1, B2, C3, D1, E4, G1Y, G4Z
18020	VK102	1/2”	15 mm	5.6	80.6	2-1/4”	57	A1, B2, C3, D1, G1Y

Approved Temperature Rating Codes

A = 135 °F (57 °C), 155 °F (68 °C), 175 °F (79 °C), 200 °F (93 °C), 212 °F (100 °C), 286 °F (141 °C), and 360 °F (182 °C)
B = 135 °F (57 °C), 155 °F (68 °C), 175 °F (79 °C), 200 °F (93 °C), and 212 °F (100 °C)
C = 286 °F (141 °C)
D = 500 °F (260 °C)[5]
E = 155 °F (68 °C), 175 °F (79 °C), 200 °F (93 °C), 286 °F (141 °C), 360 °F (182 °C), and 500 °F (260 °C)[5]
F = 135 °F (57 °C), 155 °F (68 °C), 175 °F (79 °C), and 200 °F (93 °C)
G = 155 °F (68 °C), 175 °F (79 °C), and 200 °F (93 °C)

Approved Finish Codes

1 = Brass, Chrome, White Polyester[5,6] and Black Polyester[5,6]
2 = Wax-Coated Brass (corrosion resistant)
3 = High Temperature 200 °F (93 °C) Wax Coating (corrosion resistant); maximum ambient temperature allowed at the ceiling = 150 °F (65 °C)
4 = ENT[6]
5 = Chrome

Approved Escutcheon Codes

Y = Standard surface-mounted escutcheon or recessed with the Viking Model E-1, E-2, or E-3 Recessed Escutcheon
Z = Standard surface-mounted escutcheon or recessed with the Viking Model E-1 Recessed Escutcheon

Footnotes

1. Base part number is shown. For complete part number, refer to Viking’s current price schedule.
2. Metric K-factor shown is for use when pressure is measured in bar. When pressure is measured in kPa, divide the metric K-factor shown by 10.0.
3. This table shows the listings and approvals available at the time of printing. Check with the manufacturer for any additional approvals.
4. Other colors are available on request with the same Approvals as the standard colors.
5. Sprinklers of Ultra-High temperature rating are intended for use inside ovens, dryers, or similar enclosures with normal operating temperatures above 300 °F (149 °C). Where the ambient temperature around the Ultra-High temperature rated sprinkler is significantly reduced below 300 °F (149 °C), the response time of the Ultra-High temperature rated sprinkler may be severely retarded.
6. FM approved as corrosion resistant.
7. Approved according to China GB standard.

VIKING®	TECHNICAL DATA	MICROMATIC® STANDARD RESPONSE PENDENT SPRINKLER VK102 (K5.6)

The Viking Corporation, 210 N Industrial Park Drive, Hastings MI 49058
Telephone: 269-945-9501 Technical Services: 877-384-5464 Fax: 269-818-1680 Email: techsvcs@vikingcorp.com
Visit the Viking website for the latest edition of this technical data page www.vikinggroupinc.com

DESIGN CRITERIA - UL

(Also refer to Approval Chart 1.)

cULus Listing Requirements:

The Viking Micromatic® Standard Response Pendent Sprinkler VK102 is cULus Listed as indicated in Approval Chart 1 for installation in accordance with the latest edition of NFPA 13 for standard spray sprinklers.

- Designed for use in Light, Ordinary, and Extra Hazard occupancies.
- The sprinkler installation rules contained in NFPA 13 for standard spray pendent sprinklers must be followed.
- Venting is not required.

IMPORTANT: Always refer to Bulletin Form No. F_091699 - Care and Handling of Sprinklers. Also refer to Form No. F_080614 for general care, installation, and maintenance information. Viking sprinklers are to be installed in accordance with the latest edition of Viking technical data, the appropriate standards of NFPA, LPCB, APSAD, VdS or other similar organizations, and also with the provisions of governmental codes, ordinances, and standards, whenever applicable.

DESIGN CRITERIA - FM

(Also refer to Approval Chart 2.)

FM Approval Requirements:

The Viking Micromatic® Standard Response Pendent Sprinkler VK102 is is FM Approved as standard response **Non-Storage** pendent sprinkler as indicated in the FM Approval Guide. For specific application and installation requirements, reference the latest applicable FM Loss Prevention Data Sheets (including Data Sheet 2-0). FM Global Loss Prevention Data Sheets contain guidelines relating to, but not limited to: minimum water supply requirements, hydraulic design, ceiling slope and obstructions, minimum and maximum allowable spacing, and deflector distance below the ceiling.

NOTE: The FM installation guidelines may differ from cULus and/or NFPA criteria.

IMPORTANT: Always refer to Bulletin Form No. F_091699 - Care and Handling of Sprinklers. Also refer to Form No. F_080614 for general care, installation, and maintenance information. Viking sprinklers are to be installed in accordance with the latest edition of Viking technical data, the appropriate standards of NFPA, FM Global, LPCB, APSAD, VdS or other similar organizations, and also with the provisions of governmental codes, ordinances, and standards, whenever applicable.

The Viking Corporation, 210 N Industrial Park Drive, Hastings MI 49058
Telephone: 269-945-9501 Technical Services: 877-384-5464 Fax: 269-818-1680 Email: techsvcs@vikingcorp.com
Visit the Viking website for the latest edition of this technical data page www.vikinggroupinc.com

STANDARD FINISHES

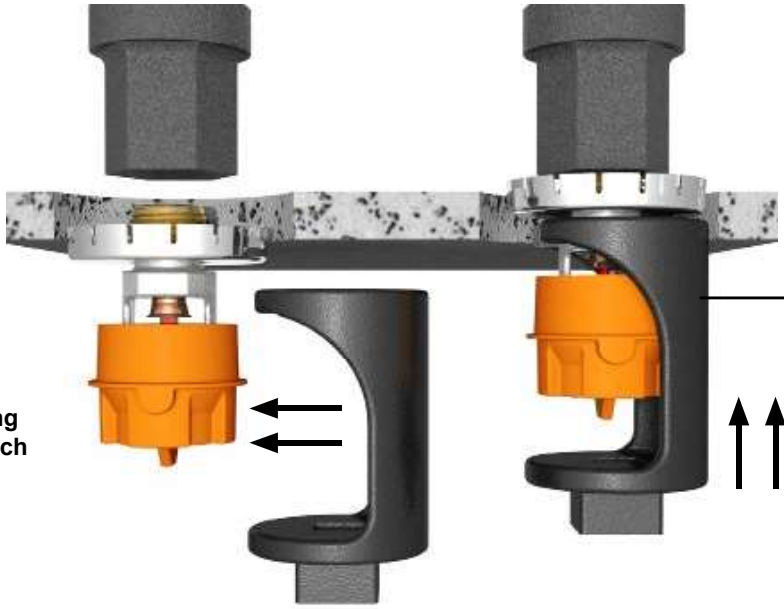

Step 1: Carefully slide the wrench sideways around the protective cap, ensuring engagement with the wrench flats.

Step 2: Carefully press the wrench upwards to engage with the wrench flats.

WAX COATED

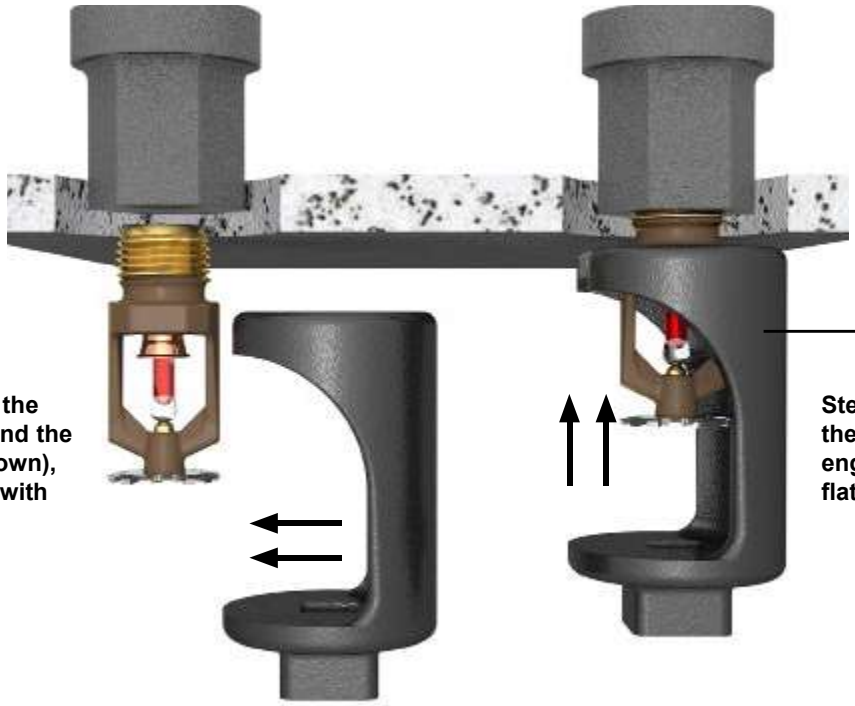

Step 1: Carefully slide the wrench sideways around the protective cap (not shown), ensuring engagement with the wrench flats.

Step 2: Carefully press the wrench upwards to engage with the wrench flats.

Figure 3: Installation with Recessed Wrenches

***Requires a 1/2 ratchet - not available from Minimax.**

VIKING®	TECHNICAL DATA	MICROMATIC® STANDARD RESPONSE PENDENT SPRINKLER VK102 (K5.6)

The Viking Corporation, 210 N Industrial Park Drive, Hastings MI 49058
Telephone: 269-945-9501 Technical Services: 877-384-5464 Fax: 269-818-1680 Email: techsvcs@vikingcorp.com
Visit the Viking website for the latest edition of this technical data page www.vikinggroupinc.com

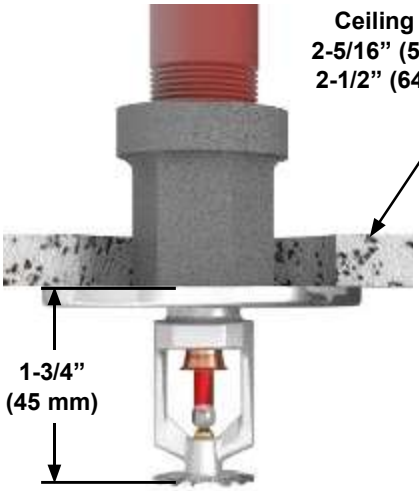

Installed with a standard 1/8" surface-mounted escutcheon

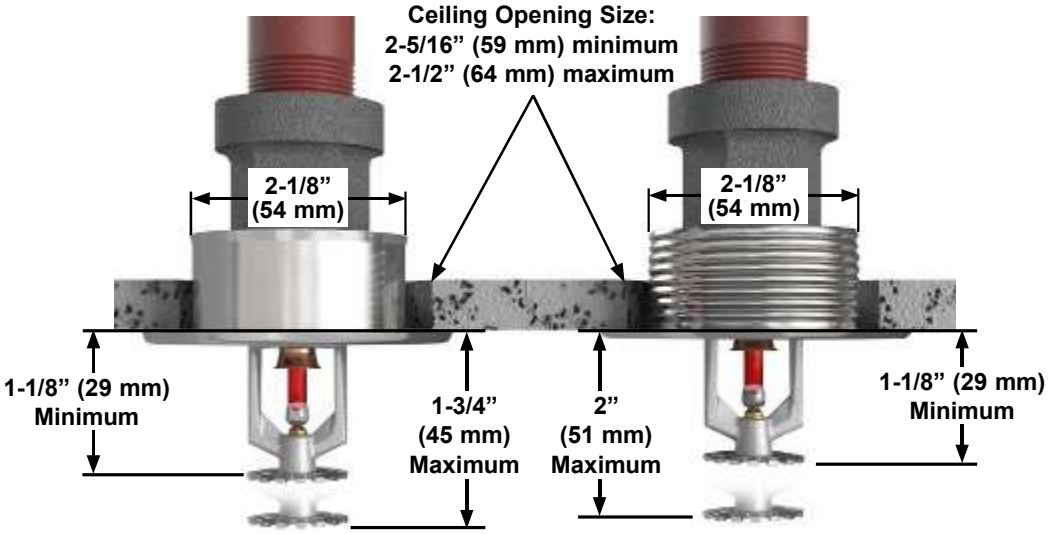

Installed with a Model E-1 Recessed Escutcheon

Installed with a Model E-2 Thread-on Recessed Escutcheon

Figure 4: Installation Dimensions with Escutcheons

VIKING

BULLETIN

CARE AND HANDLING OF SPRINKLERS

The Viking Corporation, 210 N Industrial Park Drive, Hastings MI 49058
Telephone: 269-945-9501 Technical Services: 877-384-5464 Fax: 269-818-1680 Email: techsvcs@vikingcorp.com

SPRINKLERS ARE FRAGILE - HANDLE WITH CARE!

General Handling and Storage:

- Store sprinklers in a cool, dry place.
- Protect sprinklers during storage, transport, handling, and after installation.
- Use the original shipping containers. DO NOT place sprinklers loose in boxes, bins, or buckets.
- Keep sprinklers separated at all times. DO NOT allow metal parts to contact sprinkler operating elements.

For Pre-Assembled Drops:

- Protect sprinklers during handling and after installation.
- For recessed assemblies, use the protective sprinkler cap (Viking Part Number 10364).

Sprinklers with Protective Shields or Caps:

- DO NOT remove shields or caps until after sprinkler installation and there no longer is potential for mechanical damage to the sprinkler operating elements.
- **Sprinkler shields or caps MUST be removed BEFORE placing the system in service!**
- Remove the sprinkler shield by carefully pulling it apart where it is snapped together.
- Remove the cap by turning it slightly and pulling it off the sprinkler.

Sprinkler Installation:

- DO NOT use the sprinkler deflector or operating element to start or thread the sprinkler into a fitting.
- **Use only the designated sprinkler head wrench!** Refer to the current sprinkler technical data page to determine the correct wrench for the model of sprinkler used.
- DO NOT install sprinklers onto piping at the floor level.
- Install sprinklers after the piping is in place to prevent mechanical damage.
- DO NOT allow impacts such as hammer blows directly to sprinklers or to fittings, pipe, or couplings in close proximity to sprinklers. Sprinklers can be damaged from direct or indirect impacts.
- DO NOT attempt to remove drywall, paint, etc., from sprinklers.
- **Take care not to over-tighten the sprinkler and/or damage its operating parts!**

  Maximum Torque:
  1/2" NPT: 14 ft-lbs. (19.0 N-m)
  3/4" NPT: 20 ft-lbs. (27.1 N-m)
  1" NPT: 30 ft-lbs. (40.7 N-m)

CORRECT (Original container used) — **INCORRECT** (Placed loose in box)

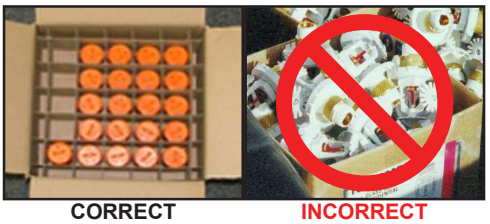

CORRECT (Protected with caps) — **INCORRECT** (Protective caps not used)

CORRECT (Piping is in place at the ceiling) — **INCORRECT** (Sprinkler at floor level)

CORRECT (Special installation wrenches) — **INCORRECT** (Designated wrench not used)

WARNING: Cancer and Reproductive Harm- www.P65Warnings.ca.gov

⚠ WARNING

Any sprinkler with a loss of liquid from the glass bulb or damage to the fusible element should be destroyed. Never install sprinklers that have been dropped, damaged, or exposed to temperatures exceeding the maximum ambient temperature allowed. Sprinklers that have been painted in the field must be replaced per NFPA 13. Protect sprinklers from paint and paint overspray in accordance with the installation standards. Do not clean sprinklers with soap and water, ammonia, or any other cleaning fluid. Do not use adhesives or solvents on sprinklers or their operating elements.

Refer to the appropriate technical data page and NFPA standards for complete care, handling, installation, and maintenance instructions. For additional product and system information Viking data pages and installation instructions are available on the Viking Web site at www.vikinggroupinc.com.

VIKING	BULLETIN	CARE AND HANDLING OF SPRINKLERS

The Viking Corporation, 210 N Industrial Park Drive, Hastings MI 49058
Telephone: 269-945-9501 Technical Services: 877-384-5464 Fax: 269-818-1680 Email: techsvcs@vikingcorp.com

PROTECTIVE SPRINKLER SHIELDS AND CAPS

General Handling and Storage:

Many Viking sprinklers are available with a plastic protective cap or shield temporarily covering the operating elements. The snap-on shields and caps are factory installed and are intended to help protect the operating elements from mechanical damage during shipping, storage, and installation. NOTE: It is still necessary to follow the care and handling instructions on the appropriate sprinkler technical data sheets* when installing sprinklers with bulb shields or caps.

WHEN TO REMOVE THE SHIELDS AND CAPS:

NOTE: SHIELDS AND CAPS MUST BE REMOVED FROM SPRINKLERS BEFORE PLACING THE SYSTEM IN SERVICE!

Remove the shield or cap from the sprinkler only after checking all of the following:

- The sprinkler has been installed*.
- The wall or ceiling finish work is completed where the sprinkler is installed and there no longer is a potential for mechanical damage to the sprinkler operating elements.

SHIELDS AND CAPS MUST BE REMOVED FROM SPRINKLERS BEFORE PLACING THE SYSTEM IN SERVICE!

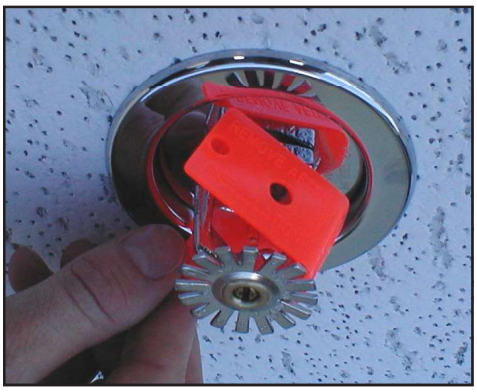

Figure 1: Sprinkler shield being removed from a pendent sprinkler.

Figure 2: Sprinkler cap being removed from a pendent sprinkler.

Figure 3: Sprinkler cap being removed from and upright sprinkler.

HOW TO REMOVE SHIELDS AND CAPS:

No tools are necessary to remove the shields or caps from sprinklers. DO NOT use any sharp objects to remove them! **Take care not to cause mechanical damage to sprinklers when removing the shields or caps.** When removing caps from fusible element sprinklers, use care to prevent dislodging ejector springs or damaging fusible elements. NOTE: Squeezing the sprinkler cap excessively could damage sprinkler fusible elements.

- To remove the shield, simply pull the ends of the shield apart where it is snapped together. Refer to Figure 1.
- To remove the cap, turn it slightly and pull it off the sprinkler. Refer to Figures 2 and 3.

NOTICE Refer to the current sprinkler technical data page to determine the correct sprinkler wrench for the model of sprinkler used.

WARNING Never install sprinklers that have been dropped, damaged, or exposed to temperatures in excess of the maximum ambient temperature allowed.

*** Refer to the appropriate current technical data pages for complete care, handling, and installation instructions. Data pages are included with each shipment from Viking or Viking distributors. They can also be found on the Web site at www.vikinggroupinc.com.**

VIKING	BULLETIN	CARE AND HANDLING OF SPRINKLERS

The Viking Corporation, 210 N Industrial Park Drive, Hastings MI 49058
Telephone: 269-945-9501 Technical Services: 877-384-5464 Fax: 269-818-1680 Email: techsvcs@vikingcorp.com

CAUTION CONCEALED COVER ASSEMBLIES ARE FRAGILE!
TO ASSURE SATISFACTORY PERFORMANCE OF THE PRODUCT, HANDLE WITH CARE.

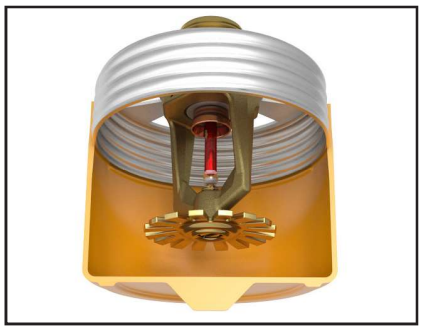

Concealed Sprinkler and Adapter Assembly with Protective Cap

Concealed Sprinkler and Adapter Assembly (Protective Cap Removed)

Cover Plate Assembly (Pendent Cover 12381 shown)

GENERAL HANDLING AND STORAGE INSTRUCTIONS:

- Do not store in temperatures exceeding 100 °F (38 °C). Avoid direct sunlight and confined areas subject to heat.
- Protect sprinklers and cover assemblies during storage, transport, handling, and after installation.
  -- Use original shipping containers.
  -- Do not place sprinklers or cover assemblies loose in boxes, bins, or buckets.
- Keep the sprinkler bodies covered with the protective sprinkler cap any time the sprinklers are shipped or handled, during testing of the system, and while ceiling finish work is being completed.
- Use only the designated Viking recessed sprinkler wrench (refer to the appropriate sprinkler data page) to install these sprinklers. **NOTE:** The protective cap is temporarily removed during installation and then placed back on the sprinkler for protection until finish work is completed.
- Do not over-tighten the sprinklers into fittings during installation.
- Do not use the sprinkler deflector to start or thread the sprinklers into fittings during installation.
- Do not attempt to remove drywall, paint, etc., from the sprinklers.
- Remove the plastic protective cap from the sprinkler before attaching the cover plate assembly. **PROTECTIVE CAPS <u>MUST</u> BE REMOVED FROM SPRINKLERS BEFORE PLACING THE SYSTEM IN SERVICE!**

Refer to the appropriate current technical data pages for complete care, handling, and installation instructions. Data pages are included with each shipment from Viking or Viking distributors. They can also be found on the Web site at www.vikinggroupinc.com.

VIKING | BULLETIN | CARE AND HANDLING OF SPRINKLERS

The Viking Corporation, 210 N Industrial Park Drive, Hastings MI 49058
Telephone: 269-945-9501 Technical Services: 877-384-5464 Fax: 269-818-1680 Email: techsvcs@vikingcorp.com

USE THE FOLLOWING PRECAUTIONS WHEN HANDLING WAX-COATED SPRINKLERS

Many of Viking's sprinklers are available with factory-applied wax coating for corrosion resistance. These sprinklers MUST receive appropriate care and handling to avoid damaging the wax coating and to assure satisfactory performance of the product.

General Handling and Storage of Wax-Coated Sprinklers:

- Store the sprinklers in a cool, dry place (in temperatures below the maximum ambient temperature allowed for the sprinkler temperature rating. Refer to Table 1 below.)
- Store containers of wax-coated sprinklers separate from other sprinklers.
- Protect the sprinklers during storage, transport, handling, and after installation.
- Use original shipping containers.
- Do not place sprinklers in loose boxes, bins, or buckets.

Installation of Wax-Coated Sprinklers:

Use only the special sprinkler head wrench designed for installing wax-coated Viking sprinklers (any other wrench may damage the unit).

- Take care not to crack the wax coating on the units.
- For touching up the wax coating after installation, wax is available from Viking in bar form. Refer to Table 1 below. The coating MUST be repaired after sprinkler installation to protect the corrosion-resistant properties of the sprinkler.
- Use care when locating sprinklers near fixtures that can generate heat. Do not install sprinklers where they would be exposed to temperatures exceeding the maximum recommended ambient temperature for the temperature rating used.
- Inspect the coated sprinklers frequently soon after installation to verify the integrity of the corrosion resistant coating. Thereafter, inspect representative samples of the coated sprinklers in accordance with NFPA 25. Close up visual inspections are necessary to determine whether the sprinklers are being affected by corrosive conditions.

TABLE 1

Sprinkler Temperature Rating (Fusing Point)	Wax Part Number	Wax Melting Point	Maximum Ambient Ceiling Temperature[1]	Wax Color
155 °F (68 °C) / 165 °F (74 °C)	02568A	148 °F (64 °C)	100 °F (38 °C)	Light Brown
175 °F (79 °C)	04146A	161 °F (71 °C)	150 °F (65 °C)	Brown
200 °F (93 °C)	04146A	161 °F (71 °C)	150 °F (65 °C)	Brown
220 °F (104 °C)	02569A	170 °F (76 °C)	150 °F (65 °C)	Dark Brown
286 °F (141 °C)	02569A	170 °F (76 °C)	150 °F (65 °C)	Dark Brown

[1] Based on NFPA-13. Other limits may apply, depending on fire loading, sprinkler location, and other requirements of the Authority Having Jurisdiction. Refer to specific installation standards.

WARNING Never install sprinklers that have been dropped, damaged, or exposed to temperatures in excess of the maximum ambient temperature allowed.

Refer to the appropriate current technical data pages for complete care, handling, and installation instructions. Data pages are included with each shipment from Viking or Viking distributors. They can also be found on the Web site at www.vikinggroupinc.com.

VIKING®	BULLETIN	REGULATORY AND HEALTH WARNINGS

The Viking Corporation, 210 N Industrial Park Drive, Hastings MI 49058
Telephone: 269-945-9501 Technical Services: 877-384-5464 Fax: 269-818-1680 Email: techsvcs@vikingcorp.com
Visit the Viking website for the latest edition of this technical data page www.vikinggroupinc.com

1. DESCRIPTION

Regulatory and Health Warnings applying to materials used in the manufacture and construction of fire protection products are provided herin as they relate to legally mandated jurisdictional regions.

⚠ WARNING
STATE OF CALIFORNIA, USA Installing or servicing fire protection products such as sprinklers, valves, piping etc. can expose you to chemicals including, but not limited to, lead, nickel, butadiene, titaninum dioxide, chromium, carbon black, and acrylonitrile which are known to the State of California to cause cancer or birth defects or other reproductive harm.
For more information, go to **www.P65Warnings.ca.gov**

2. WARRANTY TERMS AND CONDITIONS

For details of warranty, refer to Viking's current list price schedule at **www.vikinggroupinc.com** or contact Viking directly.

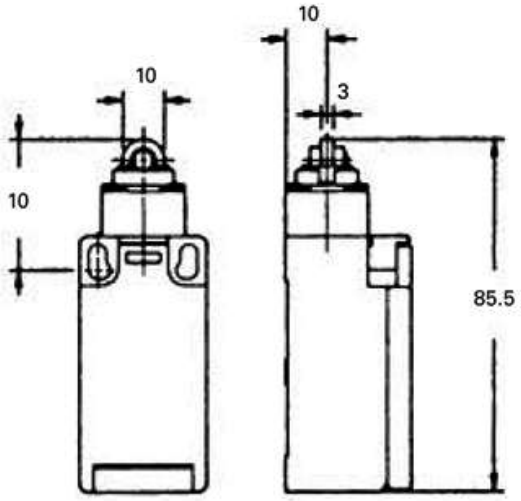

Model I88

Art. Nr.	Model Modell Modèle	Kg	CE	UL
997908	I88	0.07	√	√

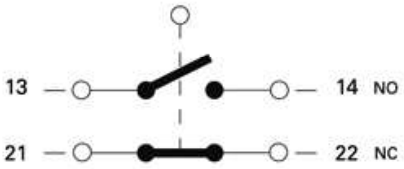

Features/Eigenschaften/Détails

Description Umschreibung Description	
Connection/Anschluß/Raccordement	-
IP Rating/IP Klassifikation/IP Classe de protection	IP65
NEMA rating/NEMA Klassifikation/NEMA Classe de protection	-
Temperature/Temperatur/Température	-30 / +70° C
Contacts/Kontakte/Contacts	10 A - 500 VAC

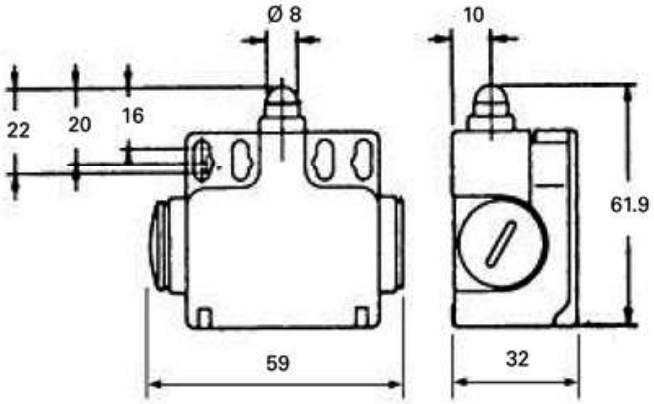

Model BIGGY

Art. Nr.	Model Modell Modèle	Kg	CE	UL
999887	BIGGY	0.08	√	√

Features/Eigenschaften/Détails

Description Umschreibung Description	
Connection/Anschluß/Raccordement	-
IP Rating/IP Klassifikation/IP Classe de protection	IP65
NEMA rating/NEMA Klassifikation/NEMA Classe de protection	-
Temperature/Temperatur/Température	-30 / +70° C
Contacts/Kontakte/Contacts	10 A - 500 VAC

POTTER
The Symbol of Protection

PS10 SERIES
PRESSURE SWITCH

UL, cUL, and CSFM Listed, FM and LPC Approved, NYMEA Accepted, CE Marked

Dimensions: 3.78" (9,6cm)W x 3.20" (8,1cm)D x 4.22" (10,7cm)H

Conduit Entrance: Two knockouts provided for 1/2" conduit. Individual switch compartments and ground screws suitable for dissimilar voltages.

Enclosure: Cover - Die-cast with textured red powdercoat finish, single cover screw and rain lip.

Base - Die-cast

Pressure Connection: Nylon 1/2" NPT Male

Factory Adjustment: 4 - 8 PSI (0,27 - 0,55 BAR)
Differential: 2 PSI (0,13 BAR) typical

Maximum System Pressure: 300 PSI (20,68 BAR)

Switch Contacts: SPDT (Form C)
10.1 Amps at 125/250VAC, 2.0 Amps at 30VDC
One SPDT in PS10-1, Two SPDT in PS10-2

Environmental Specifications:
NEMA 4/IP66 Rated Enclosure - indoor or outdoor when used with NEMA 4 conduit fittings.
Temperature range: -40°F to 140°F (-40°C to 60°C)

Service Use:

Automatic Sprinkler	NFPA-13
One or two family dwelling	NFPA-13D
Residential Occupancy up to four stories	NFPA-13R
National Fire Alarm Code	NFPA-72

Ordering Information

Model	Description	Stock No.
PS10-1	Pressure switch with one set SPDT contacts	1340103
PS10-2	Pressure switch with two sets SPDT contacts	1340104
	Hex Key	5250062
	Cover Tamper Switch Kit	0090200

Tamper
Cover incorporates tamper resistant fastener that requires a special key for removal. One key is supplied with each device. For optional cover tamper switch kit, order Stock No. 0090200. See bulletin #5401200 PSCTSK.

Installation
The Potter PS10 Series Pressure Actuated Switches are designed for the detection of a waterflow condition in automatic fire sprinkler systems of particular designs such as wet pipe systems with alarm check valves, dry pipe, preaction, or deluge valves. The PS10 is also suitable to provide a low pressure supervisory signal; adjustable between 4 and 15 psi (0,27 and 1,03 BAR).

1. Apply Teflon tape to the threaded male connection on the device. (Do not use pipe dope)
2. Device should be mounted in the upright position (threaded connection down).
3. Tighten the device using a wrench on the flats on the device.

Wiring Instructions

1. Remove the tamper resistant screw with the special key provided.
2. Carefully place a screwdriver on the edge of the knockout and sharply apply a force sufficient to dislodge the knockout plug. See Fig 9
3. Run wires through an approved conduit connector and affix the connector to the device.
4. Connect the wires to the appropriate terminal connections for the service intended. See Figures 2,4,5, and 6. See Fig 7 for two switch, one conduit wiring.

Testing
The operation of the pressure alarm switch should be tested upon completion of installation and periodically thereafter in accordance with the applicable NFPA codes and standards and/or the authority having jurisdiction (manufacturer recommends quarterly or more frequently).

Wet System
Method 1: When using PS10 and control unit with retard - connect PS10 into alarm port piping on the input side of retard chamber and electrically connect PS10 to control unit that provides a retard to compensate for surges. Insure that no unsupervised shut-off valves are present between the alarm check valve and PS10.
Method 2: When using the PS10 for local bell application or with a control that does not provide a retard feature - the PS10 must be installed on the alarm outlet side of the retard chamber of the sprinkler system.
Testing: Accomplished by opening the inspector's end-of-line test valve. Allow time to compensate for system or control retard.
Note: Method 2 is not applicable for remote station service use, if there is an unsupervised shut-off valve between the alarm check valve and the PS10.

Wet System With Excess Pressure
Connect PS10 into alarm port piping extending from alarm check valve. Retard provisions are not required. Insure that no unsupervised shut-off valves are present between the alarm check valve and the PS10.
Testing: Accomplished by opening the water by-pass test valve or the inspector's end-of-line test valve. When using end-of-line test, allow time for excess pressure to bleed off.

Dry System
Connect PS10 into alarm port piping that extends from the intermediate chamber of the alarm check valve. Install on the outlet side of the in-line check valve of the alarm port piping. Insure that no unsupervised shut-off valves are present between the alarm check valve and the PS10.
Testing: Accomplished by opening the water by-pass test valve.
Note: The above tests may also activate any other circuit closer or water motor gongs that are present on the system.

Dimensions

Fig. 1

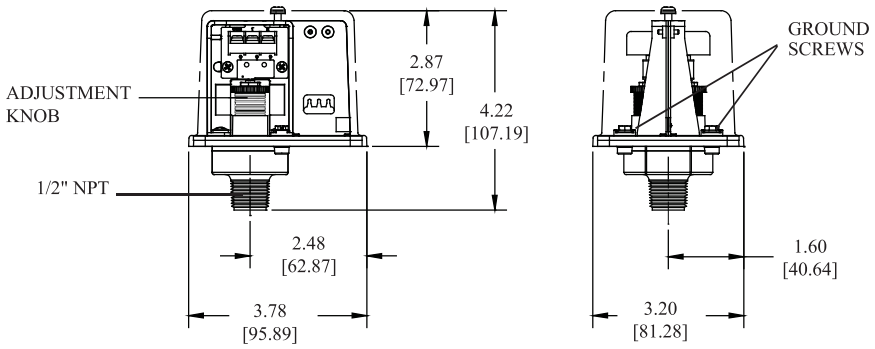

NOTE: To prevent leakage, apply Teflon tape sealant to male threads only.

DWG# 930-1

Switch Clamping Plate Terminal

Fig. 2

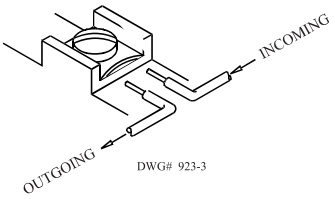

DWG# 923-3

⚠ WARNING

An uninsulated section of a single conductor should not be looped around the terminal and serve as two separate connections. The wire must be severed, thereby providing supervision of the connection in the event that the wire becomes dislodged from under the terminal.

Typical Sprinkler Applications

Fig. 3

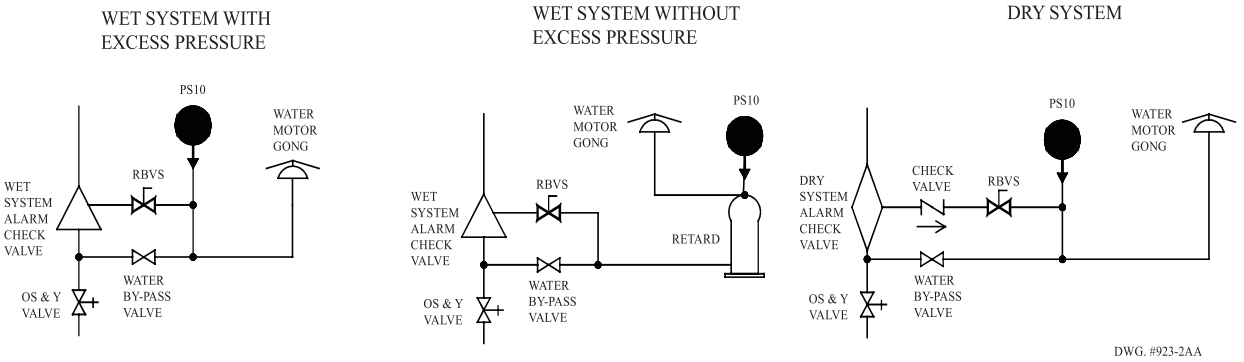

DWG. #923-2AA

⚠ CAUTION

Closing of any shutoff valves between the alarm check valve and the PS10 will render the PS10 inoperative. To comply with NFPA-72 any such valve shall be electrically supervised with a supervisory switch such as Potter Model RBVS.

Low Pressure Signal Connection

Fig. 4

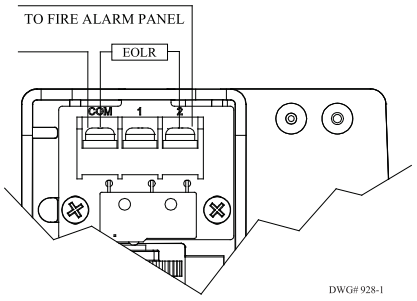

DWG# 928-1

Waterflow Signal Connection

Fig. 5

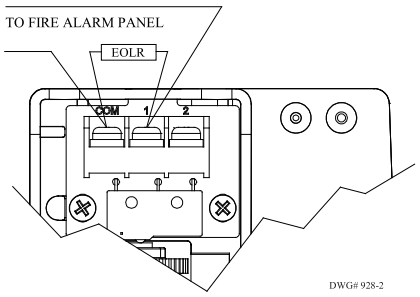

DWG# 928-2

Local Bell For Waterflow Connection

Fig. 6

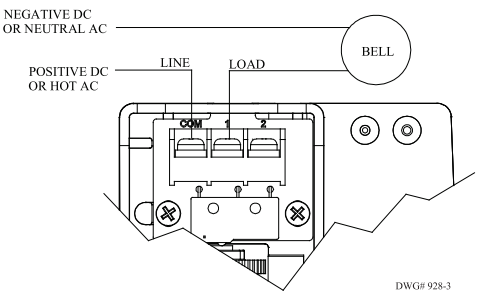

DWG# 928-3

One Conduit Wiring

Fig. 7

Break out thin section of divider to provide path for wires when wiring both switches from one conduit entrance.

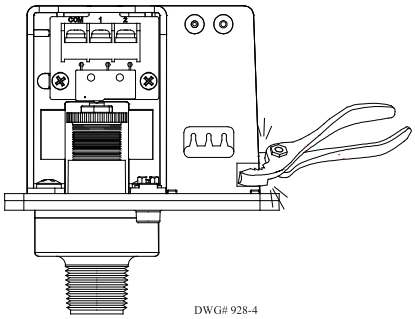

DWG# 928-4

Switch Operation

Fig. 8

Terminal
C: Common
1: Closed when installed under normal system pressure.
2: Open when installed under normal system pressure. Closes on pressure drop. Use for low pressure supervision.

W/ PRESSURE APPLIED

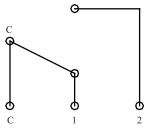

Terminal
1: Open with no pressure supplied. Closes upon detection of pressure. Use for waterflow indication.
2: Closed with no pressure applied.

W/O PRESSURE APPLIED

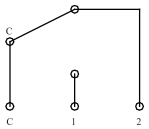

DWG#928-6

Removing Knockouts

Fig. 9

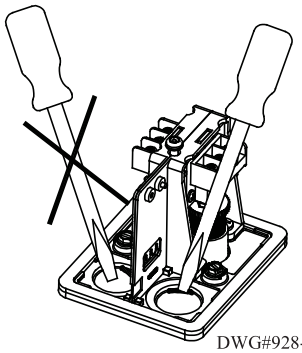

DWG#928-5

⚠ WARNING

- Installation must be performed by qualified personnel and in accordance with all national and local codes and ordinances.
- Shock hazard. Disconnect power source before servicing. Serious injury or death could result.
- Read all instructions carefully and understand them before starting installation. Save instructions for future use. Failure to read and understand instructions could result in improper operation of device resulting in serious injury or death.
- Risk of explosion. Not for use is hazardous locations. Serious injury or death could result.

⚠ CAUTION

- Do not tighten by grasping the switch enclosure. Use wrenching flats on the bushing only. Failure to install properly could damage the switch and cause improper operation resulting in damage to equipment and property.
- To seal threads, apply Teflon tape to male threads only. Using joint compounds or cement can obstruct the pressure port inlet and result in improper device operation and damage to equipment.
- Do not over tighten the device, standard piping practices apply.

Engineer/Architect Specifications Pressure Type Waterflow Switch

Pressure type waterflow switches; shall be a Model PS10 as manufactured by Potter Electric Signal Company, St Louis MO., and shall be installed on the fire sprinkler system as shown and or specified herein.

Switches shall be provided with a ½" NPT male pressure connection and shall be connected to the alarm port outlet of; Wet Pipe Alarm Valves, Dry Pipe Valves, Pre-Action Valves, or Deluge Valves. The pressure switch shall be actuated when the alarm line pressure reaches 4 - 8 PSI (0,27 - 0,55 BAR).

Pressure type waterflow switches shall have a maximum service pressure rating of 300 PSI (20,68 BAR) and shall be factory adjusted to operate on a pressure increase of 4 - 8 PSI (0,27 - 0,55 BAR)

Pressure switch shall have one or two form C contacts, switch contact rating 10.1 Amps at 125/250 VAC, 2.0 Amps at 30 VDC.

Pressure type waterflow switches shall have two conduit entrances one for each individual switch compartment to facilitate the use of dissimilar voltages for each individual switch.

The cover of the pressure type waterflow switch shall be Zinc die-cast with rain lip and shall attach with one tamper resistant screw. The Pressure type waterflow switch shall be suitable for indoor or outdoor service with a NEMA 4/IP66 rating.

The pressure type waterflow switch shall be UL Ulc and CSFM listed, FM and LPC approved and NYMEA accepted.

Waterflow Alarm Switch

VSR-EU

Alarm Devices

Technical Features

- **Service pressure :** Up to 31 bar (450 psi)
  (16 bar (232 psi) per LPCB, VdS and CE)
- **Flow Sensitivity :**
  15-38 lpm (4-10 gpm) - UL
  30-57 lpm (8-15 gpm) - CE
- **Maximum Surge :** 5.5 m/s, 18 ft/s
- **Switch Contacts :** Two sets of Single Pole Double Throw (SPDT) Form C switch contacts.
  10.0 A @ 125/250 VAC and 2.0 A @ 30 VDC on resistive load.
- **Enclosure :**
  Cover - Die cast with textured red powdercoat finish
  Housing - Cast aluminium
- **Conduit Entrance :** Requires NEMA Type 4 conduit hub for outdoor installations. Two conduit entrances provided for DN15/ 1/2".
- **Environmental Specifications :** Indoor or outdoor use ; Temperature Range : 4.5°C (40°F) to 49°C (120°F) ; NEMA 4/ IP45 Rated Enclosure - when used with proper conduit fittings. (Not for use in hazardous locations)
- **Tamper Protection :** Cover held in place by two tamper resistant screws which require a special key for removal (reference : VSRFKEY). A field installable cover tamper switch is available as an option which may be used to indicate unauthorized removal of the cover.

Retard Adjustment :

The delay can be adjusted by rotating the retard adjustment knob from 0 to the maximum setting.
The time delay should be set at the minimum required to prevent false alarms.
Note: A condition of CE approval of this product requires that it has a maximum retard of 30 seconds.

WF Alarm Switch - VSR-EU — Physical Data

Reference	Pipe Size		Installation
	Nominal (metric/inch)	O.D. (mm)	Hole Size (mm/inch)
VSR0200CE	**DN50** / 2	60.3	**33.0** ± **2** / 1.25 + .125/-.062
VSR0250CE	**DN65** / 2 1/2	73.0	**33.0** ± **2** / 1.25 + .125/-.062
VSR0250CE	**DN65** / 2 1/2	76.1	**33.0** ± **2** / 1.25 + .125/-.062
VSR0300CE	**DN80** / 3	88.9	**50.8** ± **2** / 2.00 ± .125
VSR0400CE	**DN100** / 4	114.3	**50.8** ± **2** / 2.00 ± .125
VSR0500CE	**DN125** / 5	141.3	**50.8** ± **2** / 2.00 ± .125
VSR0600CE	**DN150** / 6	165.1	**50.8** ± **2** / 2.00 ± .125
VSR0600CE	**DN150** / 6	168.3	**50.8** ± **2** / 2.00 ± .125
VSR0800CE	**DN200** / 8	219.1	**50.8** ± **2** / 2.00 ± .125

Other sizes and longer retard times are available on models without CE approval.
Contact Viking for further details.

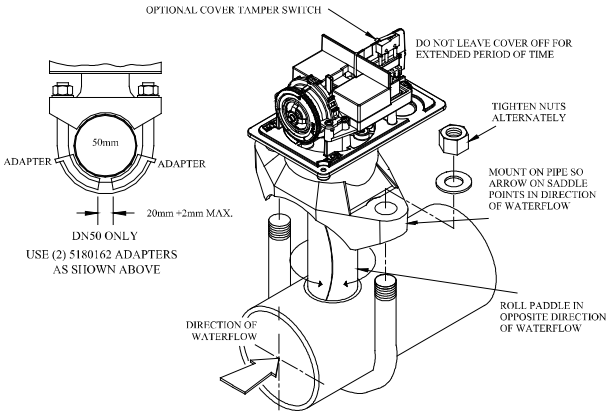

30-11-2016 Datasheet replaced version of 26-03-2013 (Updated Datsheet denomination)

Manufactured for Viking SupplyNet by Potter Electric Signal Company. Refer to Manufacturer's datasheet. Specifications subject to change without notice.

Non-Rising Stem (NRS) EN1171 Gate Valve - Flanged

NRF11

Control Valves

Technical Features

- **Sizes available (Nominal) :** DN50/2", DN65/2-1/2", DN80/3", DN100/4", DN125/5", DN150/6", DN200/8", DN250/10" and DN300/12"
- **Working Pressure :** 16 bar (232 psi)
- **Wedge type :** Resilient EPDM fully encapsulated
- **Finish :** Fusion bonded epoxy inside and outside
- **Approvals :** VdS Approved
- **Connections :** Flange diameter and thickness according to EN1092-2 PN16, and flange drilling can be in accordance with EN1092-2 PN10 for size 8"/DN200, 10"/DN250 and 12"/DN300 according to request
- **Specification :** Design and dimensions conform to EN1171
- **Supervision :** Integral bracket allows monitoring of valve in open position using supervisory switch, P/N 828482. For monitoring closed position part number NRF-SB is required

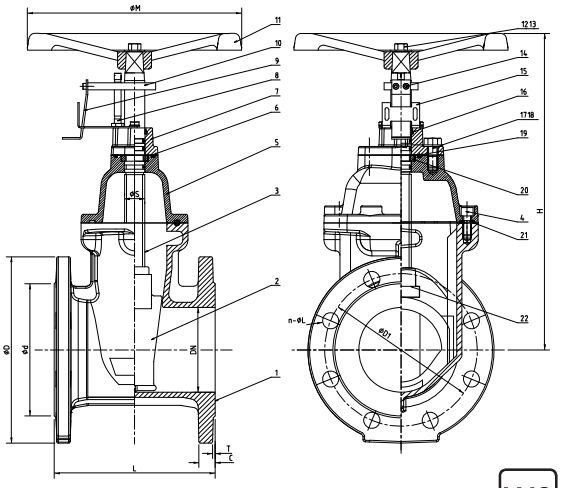

VdS

Non-Rising Stem (NRS) EN1171 Gate Valve - Flanged - NRF11

Physical Data

Reference	Nominal Pipe Size		Flange Type and Drilling	Dimensions (mm)									Weight (kg)
	Metric	inch		L(F4)	H	D	D1	d	C	T	ØM	n-ØL	
NRF11-0200PN (923433)	DN50	2"	PN10 PN16	150	282	165	125	99	19	3	180	4-Ø19	10.25
NRF11-0250PN (923432)	DN65	2-1/2"	PN10 PN16	170	290	185	145	118	19	3	180	4-Ø19	12.27
NRF11-0300PN (923431)	DN80	3"	PN10 PN16	180	331	200	160	132	19	3	200	8-Ø19	16.31
NRF11-0400PN (923430)	DN100	4"	PN10 PN16	190	366	220	180	156	19	3	254	8-Ø19	21.12
NRF11-0500PN (923429)	DN125	5"	PN10 PN16	200	447	250	210	184	19	3	280	8-Ø19	32.60
NRF11-0600 (923428)	DN150	6"	PN10 PN16	210	490	285	240	211	19	3	305	8-Ø23	42.21
NRF11-0800PN10 (923427)	DN200	8"	PN10	230	560	340	295	266	20	3	350	8-Ø23	57.28
NRF11-0800PN16 (923426)			PN16									12-Ø23	
NRF11-1000PN10 (923425)	DN250	10"	PN10	250	706	405	350	319	22	3	450	12-Ø23	105.62
NRF11-1000PN16 (923424)			PN16				355					12-Ø28	
NRF11-1200PN10 (923423)	DN300	12"	PN10	270	802	460	400	370	24.5	4	450	12-Ø23	169.02
NRF11-1200PN16 (923422)			PN16				410					12-Ø28	

Non-Rising Stem (NRS) EN1171 Gate Valve - Flanged - NRF11

Materials List

Item	Description	Material	Specification	Item	Description	Material	Specification
1	Valve Body	Ductile Iron	EN-GJS-450-10	13	Flat Washer	Carbon Steel	Zinc Plated
2	Resilient wedge disc	Ductile Iron	EN-GJS-450-10 & EPDM	14	Bolt	Stainless Steel	SS304
3	Stem	Stainless Steel	2Cr13	15	Fixed Plate	Stainless Steel	SS316
4	Bolt	Carbon Steel	Zinc Plated	16	Ring Wiper	EPDM	Commercial
5	Bonnet	Ductile Iron	EN-GJS-450-10	17	Bolt	Carbon Steel	Zinc Plated
6	O-Ring	NBR	Commercial	18	Flat Washer	Carbon Steel	Zinc Plated
7	Gland	Ductile Iron	EN-GJS-450-10	19	O-Ring	EPDM	Commercial
8	Position Fixing Spindle	Stainless Steel	SS316	20	Thrust Washer	Brass	HPb59-1
9	Limit Plate	Stainless Steel	SS316 See 23	21	Bonnet Gasket	EPDM	Commercial
10	Position Fixing Plate	Stainless Steel	SS316	22	Wedge Nut	Brass	C95400
11	Handwheel	Ductile Iron	EN-GJS-450-10	23	Switch bracket for NRF11 Valve - Part Number: NRF-SB		
12	Bolt	Carbon Steel	Zinc Plated				

03-04-2018 Datasheet updates the datasheet of 24-04-2017 (Change descriptio of item 2 in materials list)

FireKing™ is a trademark of The Viking Corporation. Specifications subject to change without notice.

Non-Rising Stem (NRS) EN1171 Gate Valve - Flanged

NRF11

Control Valves

Installation

1. Piping systems and valves should be thoroughly cleaned and free from ingress of foreign materials.
2. Visually inspect the valve seating and ports for cleanliness immediately prior to installation.
3. All valves should be independently supported against movement and stress from the connected piping system.
4. Ensure that the valve pressure rating is compatible with service conditions.
5. Operate the valve at least once from the open to closed position.
6. Verify that packing nuts are tight before pressurizing the system.
7. Gate valves are not suitable for throttling applications.
8. Gate valves should be installed in the vertical position on horizontal pipework and in the horizontal position on vertical pipework.

Operation

Gate valves are manually operated multi-turn valves and are opened by a handwheel or other operating device, generally in a counter clockwise direction and then closed clockwise.

Closing Torque for Gate Valve Handwheel		
Size		Closing Torque Nm
2″	DN50	27
2½″	DN65	38
3″	DN80	65
4″	DN100	80
5″	DN125	100
6″	DN150	125
8″	DN200	160
10	DN250	240
12″	DN300	300

Inspection and Maintenance

1. Valves should be inspected periodically and should be cycled to prevent buildup of foreign materials in the piping system and valve body.
2. Always shut down the system before repacking the valve. Valves are designed with backseats for repacking under pressure but this is not recommended.

03-04-2018 Datasheet updates the datasheet of 24-04-2017 (Change descriptio of item 2 in materials list)

FireKing™ is a trademark of The Viking Corporation. Specifications subject to change without notice.

Swing Check Valve - Flanged

SCF

Check Valves

Technical Features

- **Sizes available (Nominal):** 2"/DN50, 2-1/2"/DN65, 3"/DN80, 4"/DN100, 6"/DN150, 8"/DN200, 10"/DN250 & 12"/DN300
- **Pressure data:**
  Working Pressure: 21 bar (300 psi).
- **Working Temperature:** 0°C to 80°C
- **Seat Type:** Bronze clapper face ring and valve body seat
- **Finish:** Fusion bonded epoxy coated interior & exterior
- **Connections:** Flange diameter and thickness according to ANSI B16.1 Class 125, EN1092-2 PN10 or EN1092-2 PN16
- **Specifications:** Complys with AWWA C508, clear water-way design.

Note: Check valves may be damaged by excessively turbulent water flow. Model SCF check valves should be installed a reasonable distance from pumps, elbows, expanders, reducers, or similar devices. Typical piping practices suggest a minimum distance of five times the pipe diameter for general use

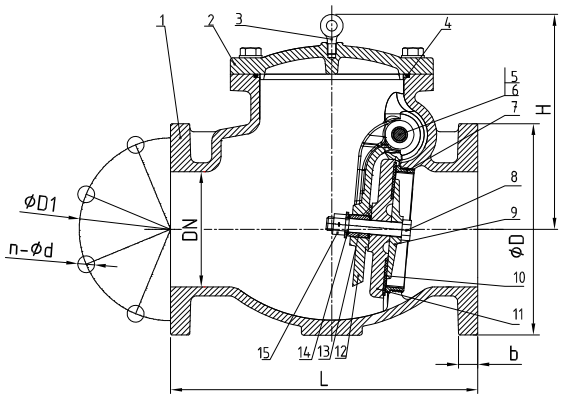

Swing Check Valve - Flanged - SCF

Physical Data

Part number*			Nominal pipe size		Dimensions (mm)										Weight (kg)
									D1			n-ØL			
ANSI	PN10	PN16	Metric	inch	L	D	b	H	ANSI	PN16	PN10	ANSI	PN16	PN10	
SCF-0200	SCF-0200PN		DN50	2"	203	152	16	133	120.5	125		4-Ø19.1			11.2
SCF-0250	SCF-0250PN		DN65	2-1/2"	254	178	17.5	150	139.5	145		4-Ø19.1			16.7
SCF-0300	SCF-0300PN		DN80	3"	279	191	19	150	152.5	160		4-Ø19.1	8-Ø19.1		22.5
SCF-0400	SCF-0400PN		DN100	4"	330	229	24	218	190.5	180		8-Ø19.1	8-Ø19.1		34.9
SCF-0600			DN150	6"	406	279	25.5	290	241.5	240		8-Ø22.2	8-Ø23		65.2
SCF-0800	SCF-0800PN10	SCF-0800PN16	DN200	8"	495	343	28.5	330	298.5	295		8-Ø22.2	12-Ø23	8-Ø23	120.7
SCF-1000	SCF-1000PN10	SCF-1000PN16	DN250	10"	622	406	30.5	350	362	355	350	12-Ø25.4	12-Ø28	12-Ø23	180.9
SCF-1200	SCF-1200PN10	SCF-1200PN16	DN300	12"	660	483	32	375	432	410	400	12-Ø25.4	12-Ø28	12-Ø23	242.3

* Valve flange drilling (size and location of bolt holes and pitch circle diameter) allows mating with the following flange types. ** Not UL or FM

ANSI = ANSI B16.1 | PN10 = DIN 2501, EN 1092 - PN10 | PN16 = DIN 2501, EN 1092 - PN16

Swing Check Valve - Flanged - SCF

Materials List

Item	Description	Material	ASTM Specifications
1	Body	Ductile iron	ASTM A536 65-45-12
2	Bonnet	Ductile iron	ASTM A536 65-45-12
3	Eyebolt	Zinc plated carbon steel	
4	O-ring	NBR	Commercial
5	Hinge pin	Stainless steel	AISI 304
6	Hinge bushing	Brass	ASTM B36
7	Seat ring	Bronze	ASTM B62
8	Disc seat bolt	Stainless steel	AISI 304
9	Retainer washer	Bronze	ASTM B62
10	Disc sealing ring	EPDM	Commercial
11	Disc	Ductile iron	ASTM A536 65-45-12
12	Clapper arm	Ductile iron	ASTM A536 65-45-12
13	Stud bushing	Brass	ASTM B36
14	O-ring	NBR	Commercial
15	Nuts	Stainless steel	AISI 304

17-10-2017 Updates datasheet of 08-06-2016 (added note at end of Technical Features)

FireKing™ is a trademark of The Viking Corporation. Specifications subject to change without notice.

Y-Strainer - Flanged

YSF

Strainers

Technical Features

- **Sizes available (Nominal):** DN50/2″, DN65/2 1/2″, DN80/3″, DN100/4″, DN150/6″, DN200/8″, DN250/10″ and DN300/12″
- **Pressure data:**
  Working pressure: 21 bar (300 psi)
- **Temperature data:**
  Working temperature: 0°C - 80°C
- **Finish:** Fusion bonded epoxy coated internal and external
- **Connections:** Flange diameter and thickness according to ANSI B16.1 Class 125 or EN1092-2 PN16

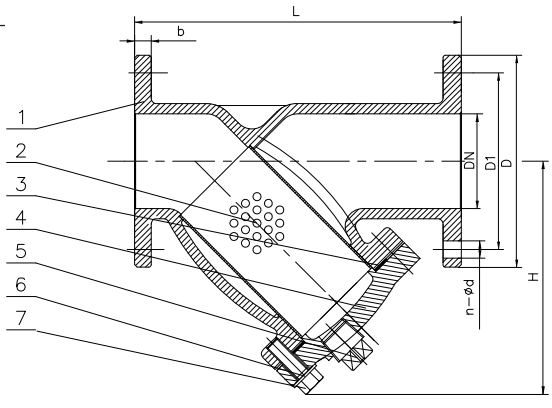

Y-Strainer - Flanged - YSF

Physical Data

Nominal Pipe Size		Dimensions (mm)								Drain Plug	Screen Size (mm)	Reference*		Weight (kg)
Metric	inch	L	D	b	H	D1		n-ØL		BSP Thread		ANSI	PN16	
						ANSI	PN16	ANSI	PN16					
DN50	2″	200	152	16	155	120.7	125	4-Ø19.1		1″	1.5	YSF-0200	YSF-0200PN	8.7
DN65	2 1/2″	254	178	17.5	165	139.7	145	4-Ø19.1		1″	1.5	YSF-0250	YSF-0250PN	12.2
DN80	3″	257	191	19	180	152.4	160	4-Ø19.1	8-Ø19.1	1″	1.5	YSF-0300	YSF-0300PN	13.8
DN100	4″	308	229	24	229	190.5	180	8-Ø19.1	8-Ø19.1	1″	1.5	YSF-0400	YSF-0400PN	23.9
DN150	6″	470	279	25.5	311	241.3	240	8-Ø22.2	8-Ø23	1 1/2″	1.5	YSF-0600		43.8
DN200	8″	549	343	28.5	394	298.5	295	8-Ø22.2	12-Ø23	1 1/2″	2	YSF-0800	YSF-0800PN16	75.4
DN250	10″	654	406	30.5	487	362.0	355	12-Ø25.5	12-Ø28	2″	2	YSF-1000	YSF-1000PN16	109.3
DN300	12″	759	483	32	547	431.8	410	12-Ø25.5	12-Ø28	2″	2	YSF-1200	YSF-1200PN16	173.1

* Valve flange drilling (size and location of bolt holes and pitch circle diameter) allows mating with the following flange types :

ANSI = ANSI B16.1 Class 125 | PN16 = DIN 2501, BS 4504, EN 1092 - PN16

Y-Strainer - Flanged - YSF

Screen Data

DN		Hole Dia. (mm)	Free Flow Area (%)
inch	mm		
2″-6″	50-150	1.5	33
8″-12″	200-300	2.0	33

Y-Strainer - Flanged - YSF

Materials List

Item	Description	Material	Specification
1	Valve Body	Ductile Iron	ASTM A536 65-45-12
2	Screen	Stainless Steel	AISI 304 (Perforated)
3	Gasket	EPDM	Commercial
4	Cover	Ductile Iron	ASTM A536 65-45-12
5	Plug	Malleable Iron	Galvanized
6	Bolt	Carbon Steel	Zinc Plated
7	Flat Washer	Carbon Steel	Zinc Plated

16-03-2017 Datasheet updates the version of 07-07-2016 (Changed screen size data)

FireKing™ is a trademark of The Viking Corporation. Specifications subject to change without notice.

VIKING®

TECHNICAL DATA

WATER MOTOR ALARMS

The Viking Corporation, 210 N Industrial Park Drive, Hastings MI 49058
Telephone: 269-945-9501 Technical Services: 877-384-5464 Fax: 269-818-1680 Email: techsvcs@vikingcorp.com

1. DESCRIPTION

The Viking water motor alarms are mechanical devices actuated by a flow of water. They are designed to sound a continuous alarm while a sprinkler system operates. An alarm is a required component of every sprinkler system having more than 20 sprinklers.

A. Features

1. The water motor alarms are tapped 3/4” NPT on the inlet and 1” NPT on the drain outlet.
2. The water motor alarm package includes a drive shaft 16-3/4” (425 mm) long for walls 14” (356 mm) thick or less. A special extension shaft is available for walls up to 30-1/4” (768 mm) thick.
3. The package also includes the required 3/4” (20 mm) NPT strainer for installation on the alarm line.
4. Rated water working pressure of Model F-2 is 250 PSI (17.2 bar).

B. Accessories: (order separately)

1. Extension Mounting Cup: Viking Part Number 05957B, Material: 14-Gauge Cold Rolled Steel, UNS-G10080, coated with black E-coat. The extension mounting cup is required when the wall thickness is less than 3” (76.2 mm). Refer to “INSTALLATION” instructions. See Figure 2.
2. Closure Plate: For use with Model F-2 only, Viking Part Number 05820B, Material: 16-Gauge Galvanized Steel, UNS-G10080. The closure plate is required when the Model F-2 Water Motor Alarm gong is mounted on an irregularly surfaced wall. It serves to prevent birds from entering the inside of the gong. The closure plate also serves as a mounting plate for sheet metal walls. Refer to “INSTALLATION” instructions. See Figure 2.
3. Special Extension Shaft: Viking Part Number 03312B, Material: Stainless Steel, UNS-S30400. The extension shaft is required when the F-2 or G-2 Water Motor Alarm is installed on walls from 14” (356 mm) to 30-1/4” (768 mm) thick.

2. LISTINGS AND APPROVALS

Viking Technical Data may be found on The Viking Corporation’s Web site at http://www.vikinggroupinc.com. The Web site may include a more recent edition of this Technical Data Page.

Model F-2:

cULus Listed - VPLX

FM Approved - Water Motor Gongs

LPCB Approved

CE - Standard EN 12259-4, EC-certificate of conformity 1725-CPD-H0001

New York City Board of Standards and Appeals - Calendar No. 219-76-SA

Model G-2:

VdS

CE - Standard EN 12259-4, EC-certificate of conformity 1725-CPD-H0001
The 07862 and 07868 Water Motor Alarms Model F-2 and Model G-2 conform to the provision of EN12259-4 standard.
EN12259-4 approvals are provided by:FM Approvals Ltd. 1 Windsor Dials Windsor, Berkshire, UK. SL4 1 RS
Approval Certificate No. issued February 15, 2010.

3. TECHNICAL DATA

Specifications

Available since 1991
Shipping Weight: Model F-2: 11 lbs. (5.0 kg); Model G-2: 13 lbs. (5.9 kg)
Model F-2 Water working pressure: Rated to 300 psi (21 bar); Model G-2 Water working pressure: 175 psi (12 bar)

Material Standards (See Figure 3)

Viking E-coat Spec: SPF02 W01

Ordering Information

Model F-2, Viking Part No. 07862
Model G-2, Viking Part No. 07868

4. INSTALLATION

Locate the water motor on an exterior wall as close as practical to the valve being monitored for water flow. A 3/4” (20 mm) strainer (included) is required on the alarm line as close as possible to the alarm outlet of the valve being monitored for water flow (or outlet of the retard chamber, if used). The location must be easily accessible for cleaning.

The Viking Corporation, 210 N Industrial Park Drive, Hastings MI 49058
Telephone: 269-945-9501 Technical Services: 877-384-5464 Fax: 269-818-1680 Email: techsvcs@vikingcorp.com

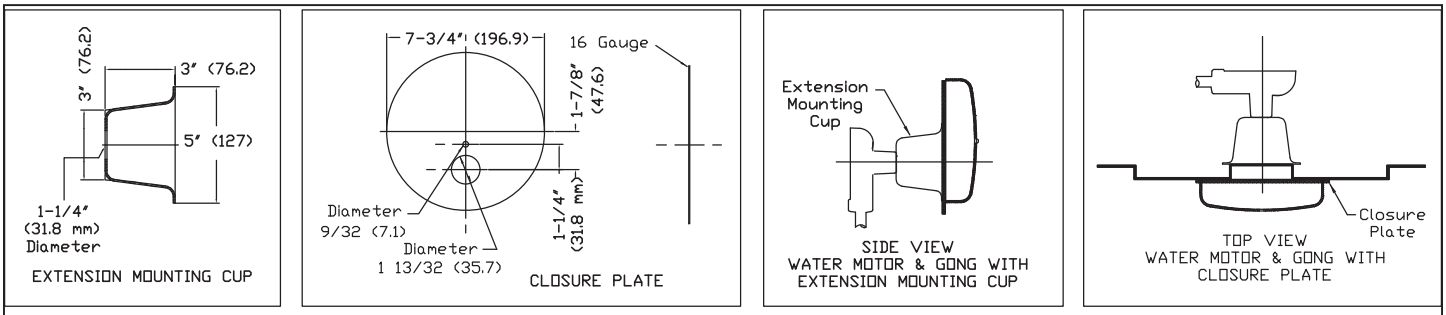

Figure 1: Accessories

A. Cut a 1-7/16" (36.5 mm) minimum to 1-5/8" (41.3 mm) maximum diameter hole in the building wall to accommodate the 3/4" (20 mm) galvanized spacer pipe. (Note: Spacer pipe is NOT included in Water Motor Alarm Package). The hole through the wall must be level or pitched slightly downward toward the water motor.
B. Measure the wall thickness.
C. Cut and thread the spacer pipe to a length equal to: The wall thickness minus 1" (25.4 mm). If the extension mounting cup is used, add an additional 3" (76 mm) to the spacer pipe.
D. Cut the drive shaft (10) to a length equal to: The total wall thickness plus 2-3/4" (70 mm). If extension mounting cup is used, add an additional 3" (76 mm).
E. File the drive shaft to provide a 3/32" (2.4 mm) x 450 chamfer on both corners of both ends. File off all burrs and insert the drive shaft into the hole of the striker arm shaft.
F. Slide the spacer pipe over the shaft and thread the end of the spacer pipe into the gong support assembly coupling (12).
G. Slide the closure plate (if used) over the free end of the spacer pipe, up to the back of the gong. If desired, the closure plate may be fastened to the gong support by using the 9/32" (7.14 mm) diameter hole in the gong support. Use only a flat or round headed fastener that will not interfere with striker arm movement.
H. Position the support assembly on the exterior wall surface by sliding the free threaded end of the spacer pipe into the hole from outside the building.
I. On the inside surface of the wall: Slide the wall plate provided (9), over the free threaded end of the spacer pipe. (If an extension mounting cup is used, place it over the end of the spacer pipe with the flared end toward the wall before sliding the wall plate into position).

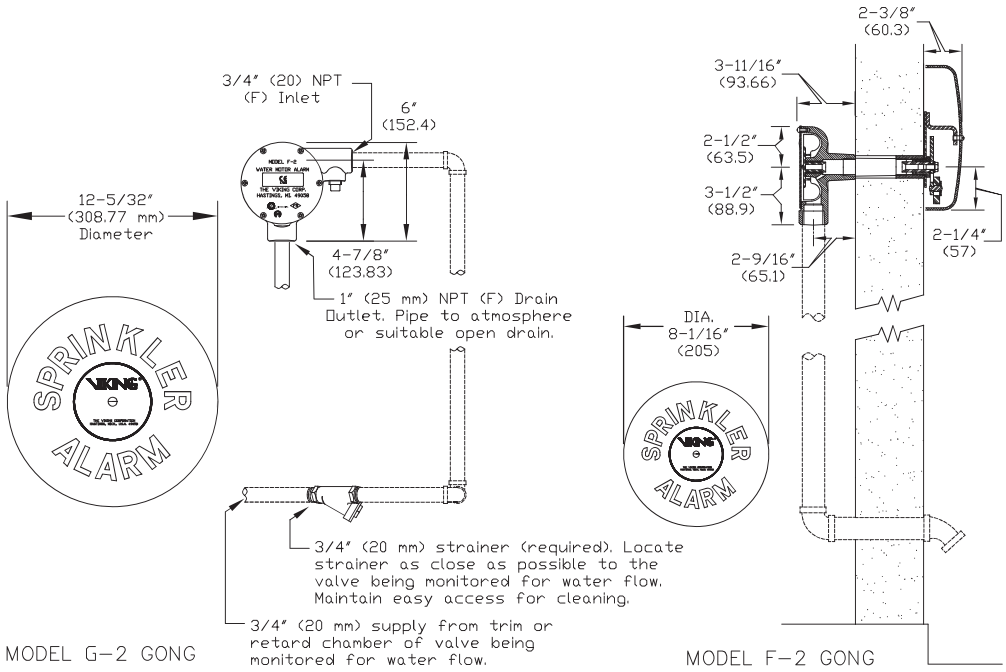

Figure 2

The Viking Corporation, 210 N Industrial Park Drive, Hastings MI 49058
Telephone: 269-945-9501 Technical Services: 877-384-5464 Fax: 269-818-1680 Email: techsvcs@vikingcorp.com

J. Remove the plastic thread protectors from the threaded openings in the body of the water motor.
K. Attach the water motor assembly by threading the body (3) onto the free threaded end of the spacer pipe. The chamfered ends of the drive shaft allow it to slide into position as the water motor body is threaded onto the spacer pipe. When the assembly is properly tightened, the water motor should be positioned with the 1” (25 mm) NPT drain outlet facing downward and the 3/4” (20 mm) NPT alarm line inlet horizontal. See Figures 1 and 3.
L. Attach the gong, the flat washer, and the gong label (16, 17, and 18) to the gong support installed on the exterior surface of the wall, with the 5/16-18 x 12” (13 mm) screw (19). Note: The flat washer must be installed between the gong and the gong support (17).
M. With galvanized, brass, or other approved corrosion-resistant piping, not less than 3/4” (20 mm) diameter, connect the water motor inlet to the alarm outlet of the waterflow detecting device. A 3/4” (20 mm) strainer (included) is required on the alarm line as close as possible to the alarm outlet of the waterflow detecting device (or outlet of the retard chamber if used). The location must be easily accessible for cleaning.
N. The drain outlet of the impeller housing must discharge to an open drain. Care shall be taken to keep the drain line clean at all times.
O. Note: A water motor drain line that:
   1. Has too many fittings, and/or
   2. Has a very short length of pipe between the 1” (25 mm) outlet and the first elbow in the water motor drain pipe, and/or
   3. Is very long may result in slow drainage and reduced water motor speed. This condition can be remedied by increasing the drain pipe diameter, increasing the length of pipe to the first elbow, and/or pitching the pipe toward the discharge location.

5. OPERATION (See Figure 3)

When a sprinkler system is activated, water flows from the alarm outlet of the valve, through the 3/4” (20 mm) strainer and alarm line piping, into the inlet of the water motor. From the 1/8” inlet orifice, the water flows through a nozzle (4), which restricts the flow into a pressurized stream directed onto the impeller (7). Force from the water stream turns the impeller and drive shaft (10), causing the striker arm (20) to rotate. The striker (25) impacts against the gong (16), producing a continuous alarm. A minimum of 5 PSI (.34 bar) is required at the nozzle to cause a continuous alarm. When properly installed, the Model F-2 Water Motor Alarm produces the required 90 decibel output and the Model G-2 produces 100 decibels. After passing through the water motor, the water is discharged through a 1” (25 mm) drain outlet in the bottom of the impeller housing. The discharged water must be piped through the wall to atmosphere or to a suitable open drain.

6. INSPECTIONS, TESTS AND MAINTENANCE

Weather-resistant materials are used in the construction of the water motor alarm. At regular intervals, examine and test the water motor to ensure that the nozzle and drain line are clean and free of obstruction, and that the alarm functions properly. Also, at regular intervals and before disassembly of the water motor, clean and inspect the alarm line strainer located at the alarm outlet of the waterflow detecting device, or the outlet of the retard chamber, if used. (Note: Some retard chambers may be equipped with a strainer built in). For minimum maintenance and inspection requirements, refer to NFPA 25. In addition, the Authority Having Jurisdiction may have additional maintenance, testing, and inspection requirements that must be followed. Before proceeding with disassembly of the water motor alarm, notify the Authority Having Jurisdiction and occupants of the area covered by the system affected. Take all appropriate precautions. The water motor alarm will be disabled during disassembly.

A. Water Motor Disassembly (See Figure 3)

1. Isolate the water motor alarm by closing the alarm line valve in the trim of the waterflow detecting device. (Refer to appropriate technical data for the system used.)
2. Remove pipe plug (5).
3. Remove all round head machine screws (1) from the water motor cover.
4. Separate the cover (2) and the gasket (6) from the housing (3).
5. Remove the impeller (7).
6. Inspect and, if necessary, carefully clean the nozzle (4) with a wire or pipe cleaner brush.
7. Flush the nozzle way and drain line with water or compressed air.

B. Water Motor Re-Assembly

1. Re-install the pipe plug (5).
2. Re-install the impeller (7).
3. Replace cover gasket (6) and attach cover (2) by using round head machine screws (1).
4. Open the alarm line valve.
5. Test the water motor alarm.
6. When test is complete and water motor alarm operation is satisfactory, place the alarm line valve in the proper “alarm” position. Reset and return the affected systems to service.

7. AVAILABILITY

Viking Water Motor Alarms are available through a network of domestic and international distributors. See the Viking Corp. Web site for closest distributor or contact The Viking Corporation.

8. GUARANTEES

For details of warranty, refer to Viking’s current list price schedule or contact Viking directly.

TECHNICAL DATA

WATER MOTOR ALARMS

The Viking Corporation, 210 N Industrial Park Drive, Hastings MI 49058
Telephone: 269-945-9501 Technical Services: 877-384-5464 Fax: 269-818-1680 Email: techsvcs@vikingcorp.com

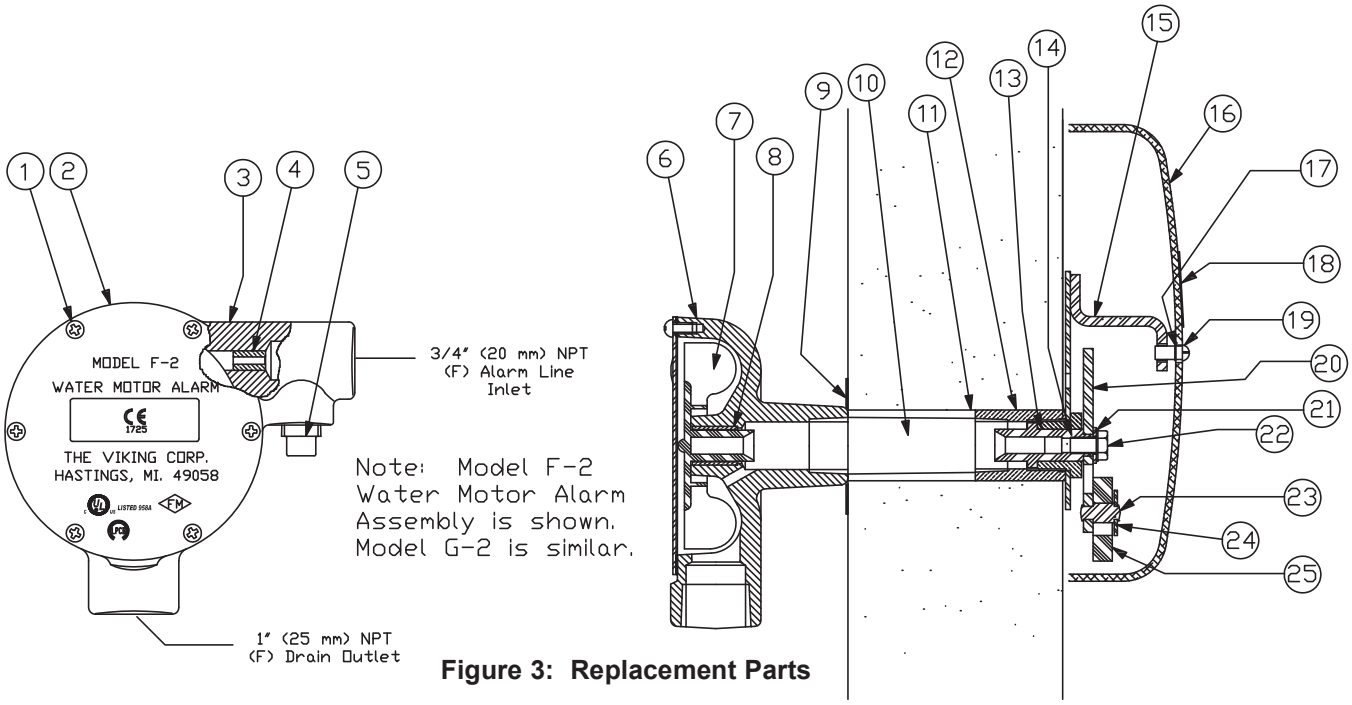

Figure 3: Replacement Parts

ITEM NO.	PART NUMBER		DESCRIPTION	MATERIAL	NO. REQ'D
	F-2	G-2			
1	*	*	Screw, R. H. Self-tap #10-24 x 3/8" lg.	Zinc Plated Steel	6
2	07867	07870	Cover	Steel	1
3	*	*	Housing	Cast Iron	1
4	*	*	Nozzle	Brass	1
5	01925S	01925S	1/2" Pipe Plug	Cast Iron	1
6	02550B	02550B	Cover Gasket	Cellulose/Nitrile/Glass Blend	1
7	02547C	02547C	Impeller	Delrin	1
8	*	*	Bearing	Brass: Sintered Bronze	1
9	05603A	05603A	Wall Plate	Galvanized Steel	1
10	05604B	05604B	Drive Shaft	Stainless Steel	1
11	--	--	3/4" Pipe (C.O.J.) not furnished	Galvanized Steel	1
12	*	*	Coupling	Brass	1
13	02556B	02556B	Striker Arm Shaft	Celcon Glass Filled	1
14	*	*	Bearing	Brass	1
15	*	*	Gong Support	Stainless Steel	1
16	05821C	06508C	Gong	Aluminum	1
17	02766A	02766A	Flat Washer, 11/32" ID x 11/16" ID x 1/16"	Stainless Steel	1
18	05768A	06505C	Gong Label	Aluminum (F-2), Vinyl (G-2)	1
19	--	--	Screw, B.H. Slotted, 5/16-18 x 1/2" lg.	Stainless Steel	1
20	*	*	Striker Arm	Stainless Steel	1
21	--	--	Flat Washer, 11/32" ID x 11/16" OD x 1/16"	Stainless Steel	1
22	--	--	Screw, H.H. Self-tap 5/16-18 x 1/2" lg.	Zinc Plated Steel	1
23	*	*	Striker Pin	Stainless Steel	1
24	*	*	Striker Arm Washer	Stainless Steel	1
25	*	*	Striker	Canvas Phenolic	1
--Indicates replacement part not available					
*Indicates replacement part only available in a Sub-Assembly listed below					
SUB-ASSEMBLIES					
1-8	07863	07869	Motor Assembly		
20, 23-25	02558B	02558B	Striker Arm Assembly		
12-15, 20-25	05606C	06506C	Support Assembly		

Schlauchanschluss DN25 kompl. *hose coupling DN25 complete*

Maße in **mm**; Gewicht in **kg/St.**

*dimensions in **mm**; weight in **kg/pc***

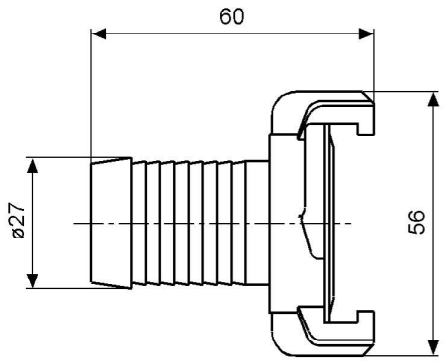

Schlauchkupplung
hose coupling

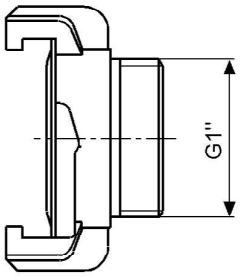

Gewindekupplung
coupling with thread

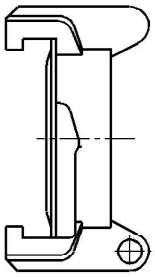

Blindkupplung
blank coupling

Bezeichnung *designation*	Art.-Nr. *order no.*	Gewicht *weight*
Schlauchanschluss DN25 kompl. *hose coupling DN25 compl.*	82 4531 (LG)	0,33

(LG) = lagerhaltig

(LG) = available from stock

Instandhaltung: .....wartungsfrei
Produktinformation: .....·/·
Ersatzteile: .....·/·

maintenance: .....*maintenance-free*
product information: .....·/·
spare parts: .....·/·

Material .....Messing

material .....*brass*

Lieferumfang:
Schlauchkupplung .....für Schlauch DN25
Gewindekupplung .....mit Außengewinde G1"
Blindkupplung DN25

included in delivery:
hose coupling .....*for hose DN25*
coupling with thread .....*with male thread G1"*
blank coupling *DN25*

Verwendung:
Anschluss an Prüfarmatur K . . . .M2-03-24 Teil 1

application:
connection of test valve K. . . ..M2-03-24 part 1

Dieses Dokument unterliegt im ausgedruckten Zustand nicht dem Änderungsdienst.
This printed document is not part of the change service.

Fan heater Cat

Compact fan heater for smaller premises

Cat is a range of compact and quiet fan heaters for stationary use. It is ideally suited for small stockrooms, in a garage, workshop or shop.

The Cat fan heater has a classic clean design in white enamelled sheet steel. It is small and unobtrusive and with that easy to position.

- Low sound level.
- Wall bracket with 10° tilt angle for good heat distribution.
- Integrated output selector.
- To comply with Ecodesign Regulation (EU) 2015/1188 the unit must be installed with thermostat TAP16R (accessory). TAP16R has adaptive start, week program and open window detection.
- Cat 3 kW can also be connected to single phase (230V~).
- Corrosion proof housing made of hot zinc-plate and powder enameled steel panels. Colour: RAL 9016, NCS S 0500-N (white).

Fan heater Cat (IP44)

Type	Output steps [kW]	Airflow [m³/h]	Sound level*1 [dB(A)]	Δt*2 [°C]	Motor [W]	Voltage [V]	Amperage [A]	HxWxD [mm]	Weight [kg]
C3N	0/1,5/3	280	41	32	28	230V~/400V3N~*3	13,2/4,4	255x335x276	6,3
C5N	0/2,5/5	480	40	31	34	400V3N~	7,3	255x335x276	6,7
C9N	0/4,5/9	720	44	37	52	400V3N~	13,1	315x405x335	10,2

*1) Conditions: Distance to the unit 3 metres. Directional factor: 2. Equivalent absorption area: 200 m².
*2) Δt = temperature rise of passing air at maximum heat output.
*3) Supplied connected for 400V3N~. C3N can be connected for 230V~ and 400V3N~. Other models should not be connected for single phase, 230V~.

Approved for 220V/1ph/60Hz and 380V/3ph/60Hz. Product performance for 220V/1ph/60Hz and 380V/3ph/60Hz will differ from stated data.

Air throw

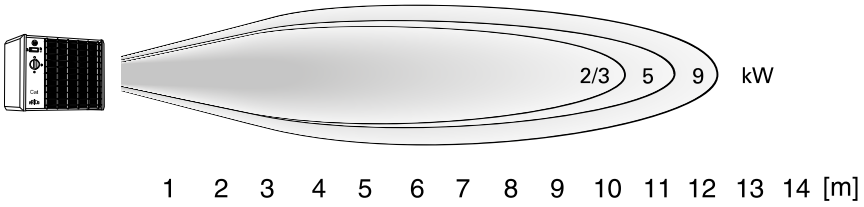

2019-11-29

Dimensions

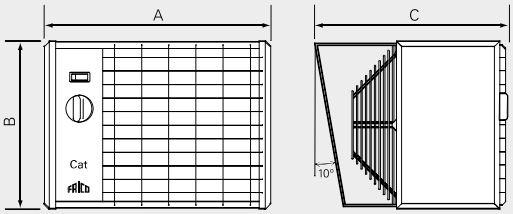

	A [mm]	B [mm]	C [mm]
C3N	335	255	276
C5N	335	255	276
C9N	405	315	335

Control options

Fan heater Cat is equipped with integrated function switch and output selector. The function switch makes it possible to select if the external thermostat controls both the fan and the heating, or only the heating.

The output is set on the integrated output selector. An external output selector can also be used.

The fan heater must be installed with thermostat TAP16R which offers adaptive start, week program and open window detection.

- TAP16R, electronic thermostat

The product can be controlled in a different way, e.g. by an overall control system (BMS) as long as the requirements of Ecodesign Regulation are met.

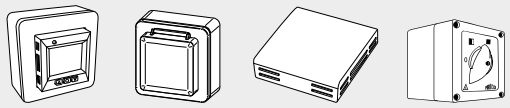

TAP16R TEP44 RTX54 EV300

Type	Description	HxWxD [mm]
TAP16R	Electronic thermostat, IP21	87x87x53
TEP44	Protective enclosure for TAP16R, IP44	87x87x55
RTX54	External room temperature sensor, NTC10KΩ, IP54	82x88x25
EV300	Output selector	100x80x90

Control options for installations not covered by the Ecodesign Regulation (EU) 2015/1188

Fan heater Cat is equipped with integrated function switch and output selector. The function switch makes it possible to select if the external thermostat controls both the fan and the heating, or only the heating.

The output is set on the integrated output selector. An external output selector can also be used.

The fan heater should be installed with an external thermostat.

- KRT1900/KRTV19, capillary tube thermostat
- EV300, output selector
- CBT, electronic timer

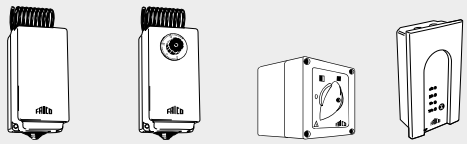

KRT1900 KRTV19 EV300 CBT

Type	Description	HxWxD [mm]
KRT1900	Capillary tube thermostat, IP55	165x57x60
KRTV19	Capillary tube thermostat with knob, IP44	165x57x60
EV300	Output selector	100x80x90
CBT	Electronic timer	155x87x43

For mounting, connection, wiring diagrams and other technical information, please see the manual.

Company name:
Created by:
Phone:

Date: 26/05/2025

Qty.	Description
1	**SEG.40.12.2.50B**

Note! Product picture may differ from actual product

Product No.: 96075905

Grundfos SEG grinder pumps are non-self-priming, single-stage, centrifugal pumps with horizontal discharge port, specifically designed for pumping wastewater containing discharge from toilets. The pump is equipped with a grinder system that grinds destructible solids into small pieces to lead them through pipes with a relatively small diameter.

SEG grinder pumps are ideal for use in sparsely populated areas, where gravity sewage systems are not available. Examples include villages, farm areas and areas with large terrain-level differences, where a pressurised system has advantages.

The pump is available for two types of installation:

- submerged installation on auto-coupling systems
- submerged installation, free-standing.

The pump is made of wear-resistant materials, such as cast iron and stainless steel.

These materials ensure reliable operation.

The surface of the pump is smooth to prevent dirt and impurities from sticking.

The corrosion-resistant stainless steel clamp is securing the motor to the pump housing and allow the easy service of the pump.

SmartTrim system allows easy adjustment of the impeller clearance to ensure maximum efficiency during the pump lifespan.

The range is designed to reduce energy consumption and keep downtime costs to a minimum, while maintaining peak performance throughout the lifespan of the system.

Controls:

Moisture sensor:	without moisture sensors
AUTOADAPT:	No

Liquid:

Liquid temperature range:	0 .. 40 °C
Selected liquid temperature:	20 °C
Density:	998.2 kg/m³

Technical:

Actual calculated flow:	4900 l/h
Resulting head of the pump:	19.04 m
Type of impeller:	GRINDER SYSTEM
Primary shaft seal:	SIC/SIC
Approvals:	PA-I
Curve tolerance:	ISO9906:2012 3B2

Materials:

Pump housing:	Cast iron EN1561 EN-GJL-200
Impeller:	Cast iron EN1561 EN-GJL-200

Installation:

Company name:
Created by:
Phone:

Date: 26/05/2025

Qty.	Description	
1	Maximum ambient temperature:	40 °C
	Maximum operating pressure:	6 bar
	Flange standard:	DIN
	Pipework connection:	DN 40/50
	Pump outlet:	DN 40
	Pressure rating:	PN 10
	Maximum installation depth:	7 m
	Auto-coupling:	96076063
	Electrical data:	
	Power input - P1:	1.6 kW
	Rated power - P2:	1.2 kW
	Mains frequency:	50 Hz
	Rated voltage:	3 x 400-415 V
	Voltage tolerance:	+6/-10 %
	Max starts per hour:	30
	Rated current:	3 A
	Starting current:	21 A
	Rated current at no load:	2.1 A
	Cos phi - power factor:	0.81
	Cos phi - p.f. at 3/4 load:	0.72
	Cos phi - p.f. at 1/2 load:	0.58
	Rated speed:	2750 rpm
	Moment of inertia:	0.0038 kg m²
	Motor efficiency at full load:	73 %
	Motor efficiency at 3/4 load:	71 %
	Motor efficiency at 1/2 load:	66 %
	Number of poles:	2
	Start. method:	direct-on-line
	Enclosure class (IEC 34-5):	IP68
	Insulation class (IEC 85):	F
	Explosion proof:	no
	Length of cable:	10 m
	Cable type:	07RN8-F
	Type of cable plug:	No plug
	Others:	
	Net weight:	33 kg
	Danish VVS No.:	391342131
	Swedish RSK No.:	5885829
	Finnish LVI No.:	4836103
	Norwegian NRF no.:	9045801
	Country of origin:	HU
	Custom tariff no.:	84137021

Company name:
Created by:
Phone:

Date: 26/05/2025

96075905 SEG.40.12.2.50B 50 Hz

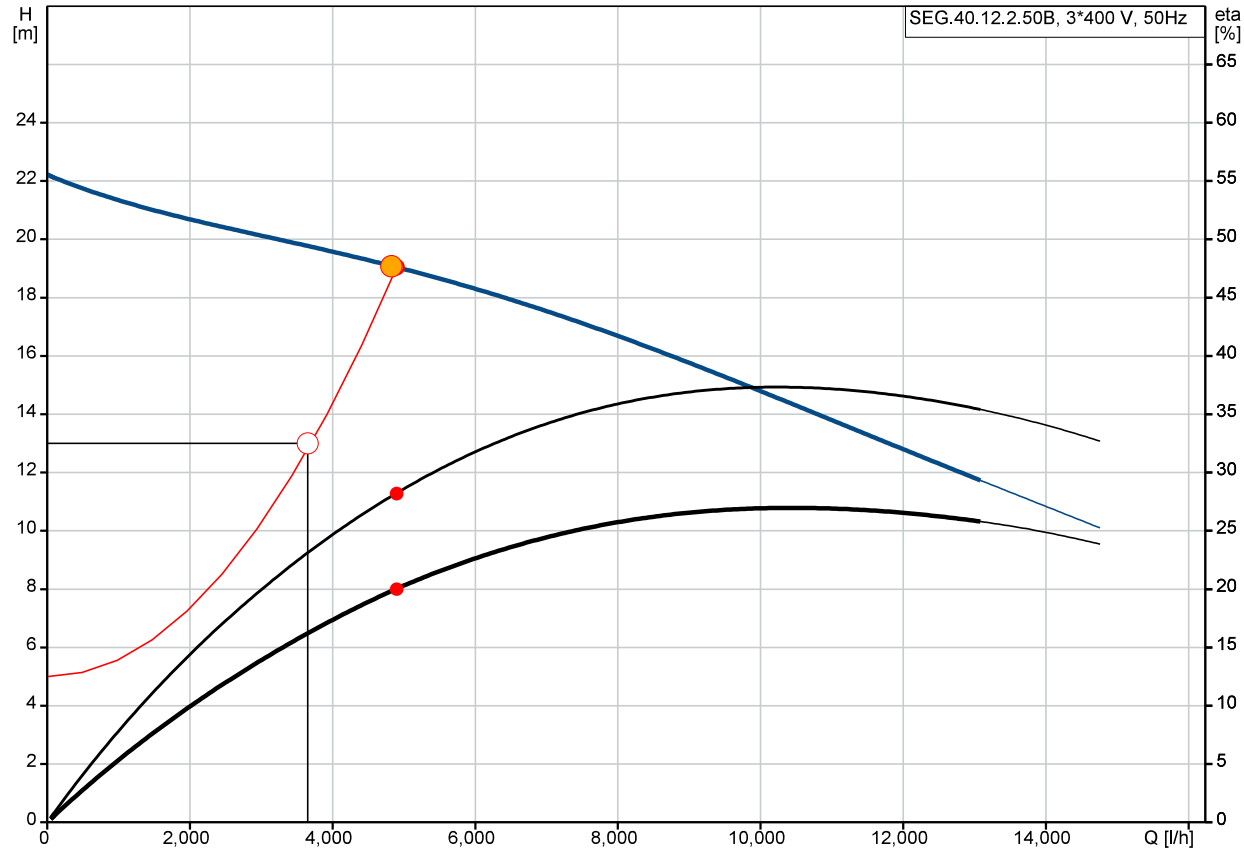

Q = 4900 l/h
H = 19.04 m
Liquid temperature during operation = 20 °C
Eta pump = 28.2 %
Eta pump+motor = 20 %

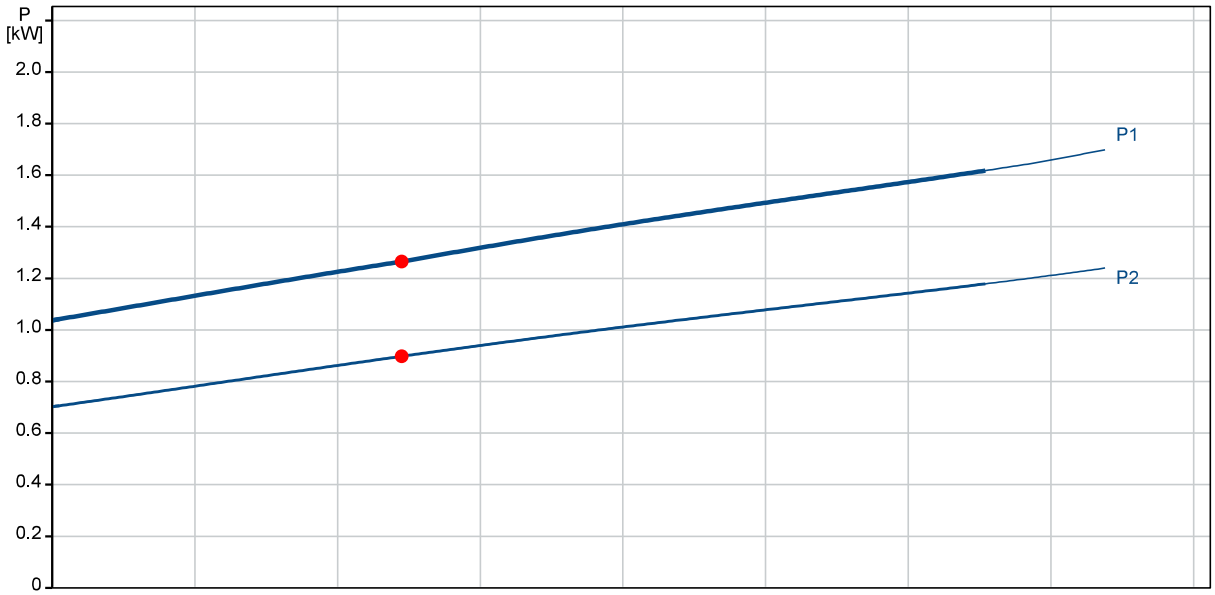

P1 = 1.265 kW
P2 = 0.898 kW

Company name:
Created by:
Phone:

Date: 26/05/2025

96075905 SEG.40.12.2.50B 50 Hz

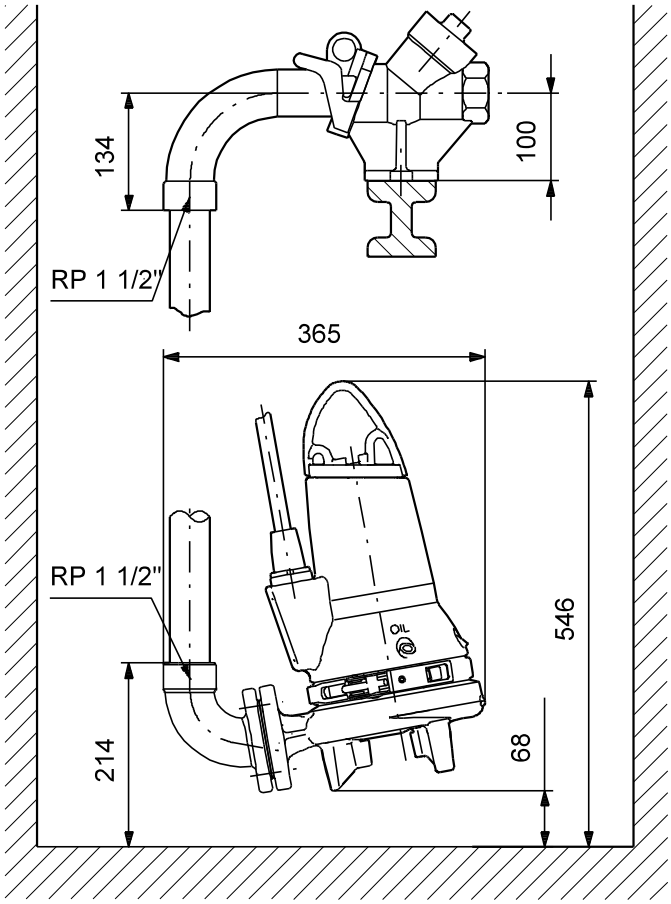

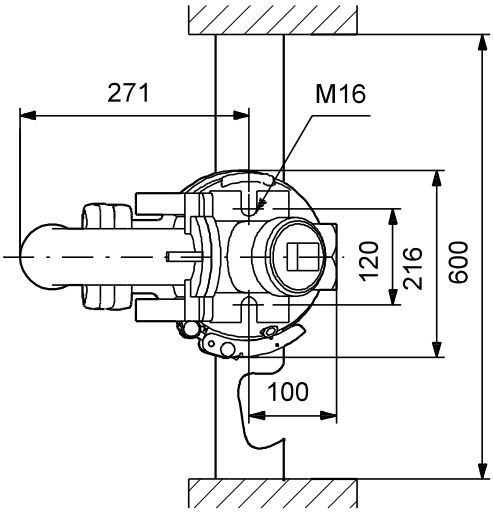

Note! All units are in [mm] unless others are stated.
Disclaimer: This simplified dimensional drawing does not show all details.

Company name:
Created by:
Phone:

Date: 26/05/2025

96075905 SEG.40.12.2.50B 50 Hz

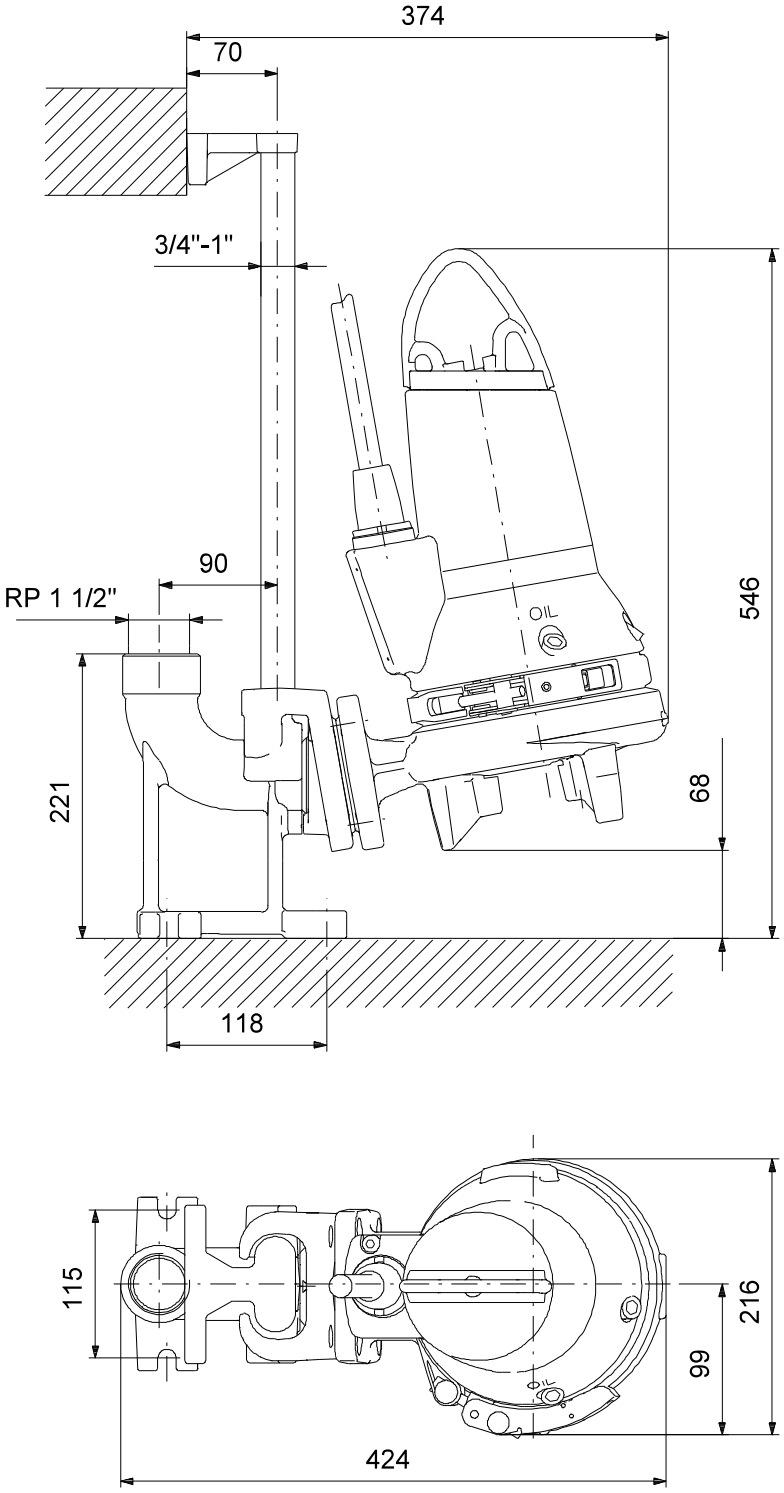

Note! All units are in [mm] unless others are stated.
Disclaimer: This simplified dimensional drawing does not show all details.

Company name:
Created by:
Phone:

Date: 26/05/2025

96075905 SEG.40.12.2.50B 50 Hz

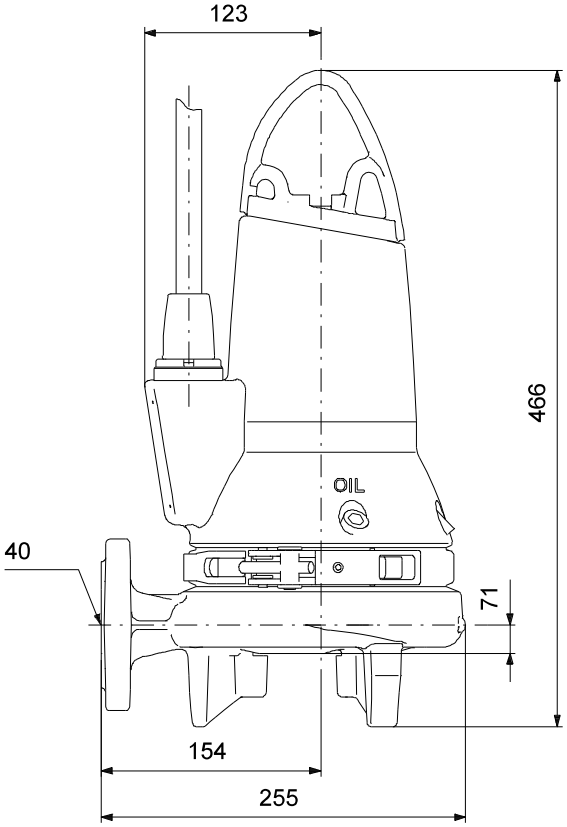

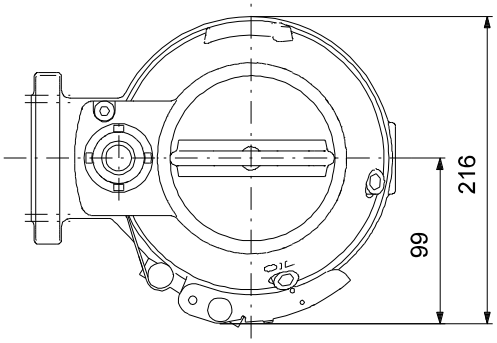

Note! All units are in [mm] unless others are stated.
Disclaimer: This simplified dimensional drawing does not show all details.

Company name:
Created by:
Phone:

Date: 26/05/2025

96075905 SEG.40.12.2.50B 50 Hz

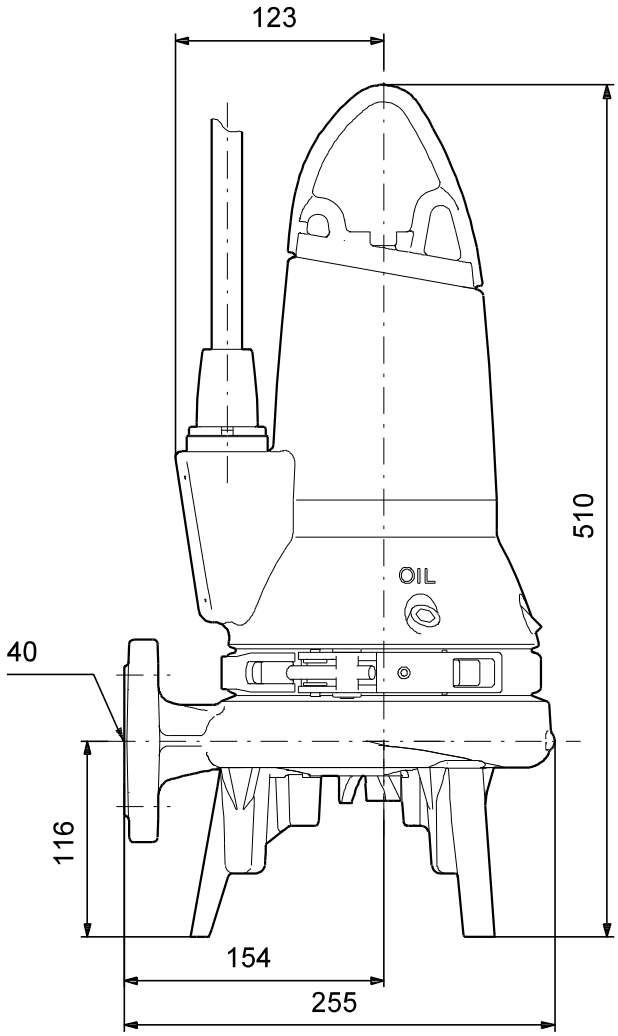

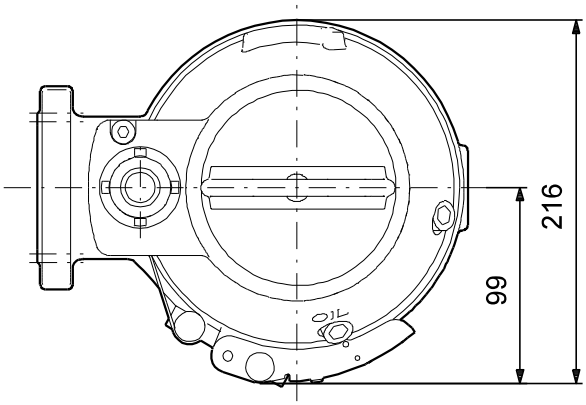

Note! All units are in [mm] unless others are stated.
Disclaimer: This simplified dimensional drawing does not show all details.

Company name:
Created by:
Phone:

Date: 26/05/2025

96075905 SEG.40.12.2.50B 50 Hz

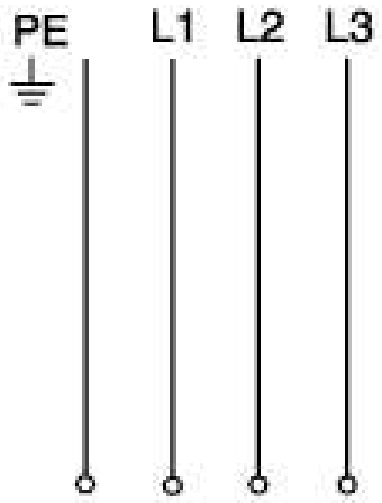

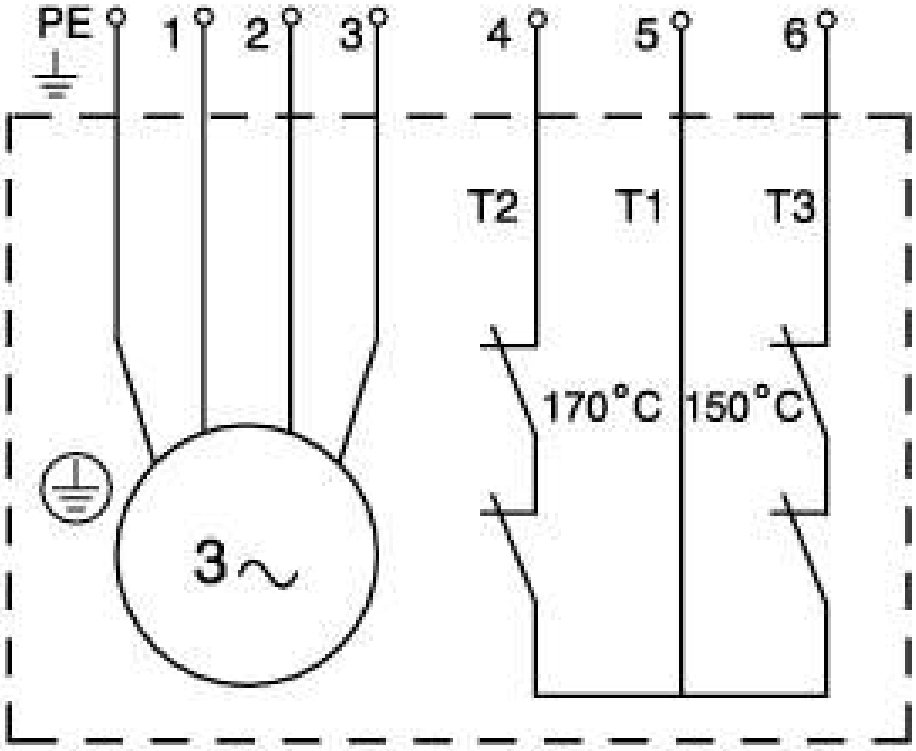

Note! All units are in [mm] unless others are stated.

HC-35-4M/H

Code: 1017106

Wall mounted axial fans with IP55 motor

Wall mounted axial fans with fibreglass reinforced plastic propeller.

Fan:
- Steel sheet support frame.
- Fibreglass reinforced polyamide-6 impeller.
- Protection grid against contacts according to UNE-EN ISO 12499.
- Models 71, 80, 90 and 100: The protection grid is supplied as an accessory.
- Airflow direction from motor to impeller.

Motor:
- Motors with IE3 efficiency for powers equal to or greater than 0.75 kW, except single-phase, 2-speed and 8-pole.
- Class F motors with ball bearings. IP55 protection. Except single-phase models from size 45 to size 63, with IP54 protection. 1 or 2 speeds depending on model.
- Single-phase 230 V 50 Hz and three-phase 230/400 V 50 Hz (up to 4 kW) and 400/690 V 50 Hz (powers greater than 4 kW).
- Working temperature: -25 ºC +60 ºC.

Finish:
- Anti-corrosive finish in polyester resin, polymerised at 190 ºC, after degreasing with phosphate-free nanotechnology treatment.

On request:
- Motor, impeller and grille assembly (F version), except models 71, 80, 90 and 100, which are supplied without a grille.
- Motor, impeller assembly (version G).
- Airflow direction from impeller to motor.
- Special windings for different voltages.

CHARACTERISTIC CURVE AND ACOUSTICS AT 1.2KG/M³

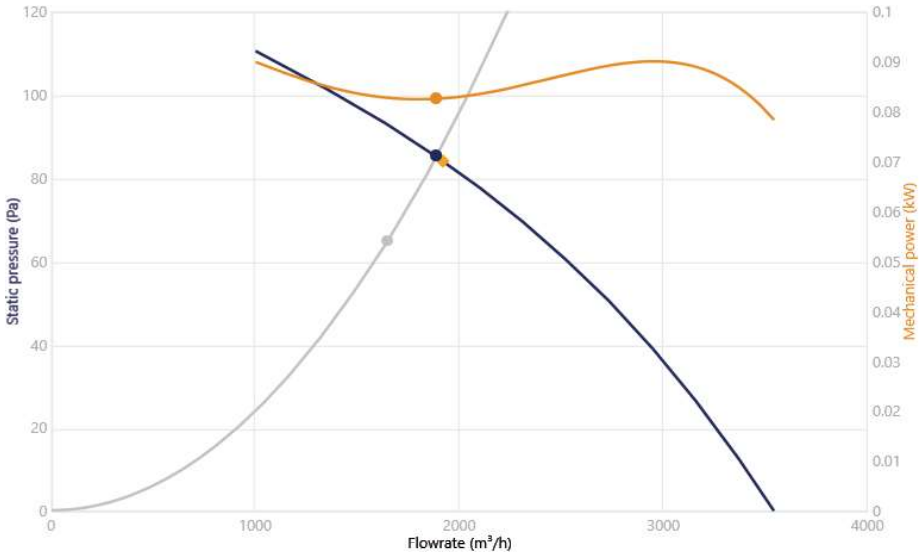

Design Point

Q (m³/h)	1650
Ps (Pa)	65

Service Point (SP)

Q (m³/h)	1888
Ps (Pa)	85.15
Pd (Pa)	16.19
Pt (Pa)	101.3
Impeller (rpm)	1370
Max. Temp. (ºC)	60
Outlet air speed (m/s)	5.194
Mechanical efficiency (Pt) (%)	64.46
SFP (kW/m³/s)	0.3083
Mechanical power (kW)	0.0825

Acoustics: Inlet, 3 (m), Free field

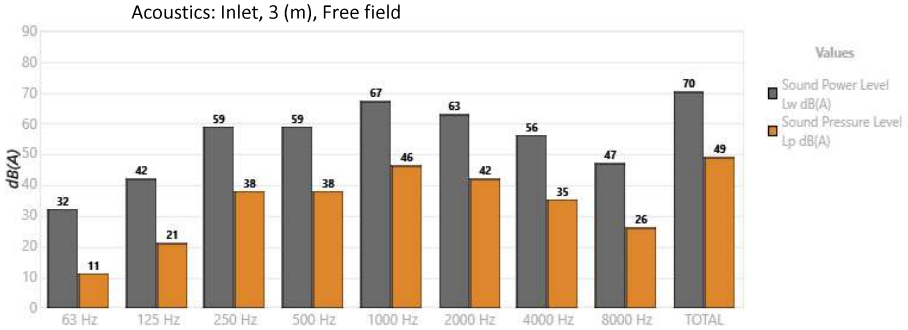

Band	Lw dB(A)	Lp dB(A)
63 Hz	32	11
125 Hz	42	21
250 Hz	59	38
500 Hz	59	38
1000 Hz	67	46
2000 Hz	63	42
4000 Hz	56	35
8000 Hz	47	26
TOTAL	70	49

TECHNICAL CHARACTERISTICS

Airflow maximum (m³/h)	3545
Speed (rpm)	1370
Maximum static pressure (Pa)	110.4
Maximum total pressure (Pa)	115

ERP

Efficiency	30.3%
Efficiency grade N	41.9
Measurement category	A
Efficiency category	Static
Specific ratio	1.00
Flowrate (m³/h)	1923

Pressure (Pa)	84
Input power (kW)	0.148
Speed (rpm)	1419
Variable speed drive	VSD not necessary
ErP compliance	2015

◆ **Data established at point of optimum efficiency**

MOTOR DATA

Rated Mechanical Power (kW)	0.09
Hz/phases	50/1
Motor (rpm)	1370
Poles	4P
Max. current (A) 220-240 V	0.83
Motor protection	IP55
Motor frame size	56

Data can change, please check motor plate

DIMENSIONS

A	B	C	D	E	G	H	J	K
465	390	362.5	360	261	11	76	10.5	450

Dimensions without explicitly defined units are shown in millimeters (mm). Dimensions depending on the motor are approximate

Approx. weight (kg)	7

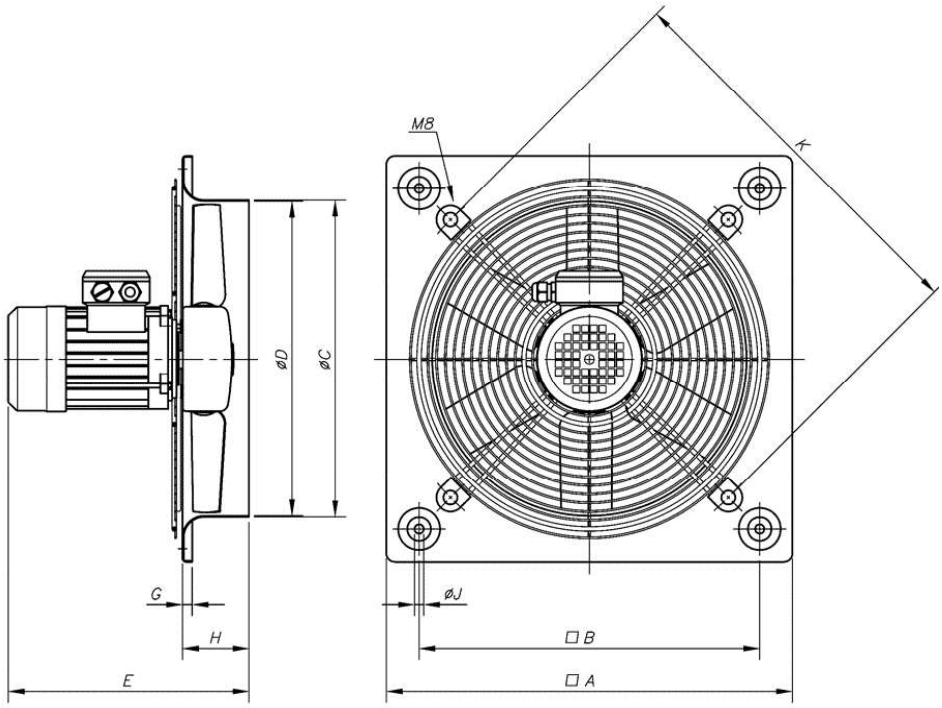

AVAILABLE ACCESSORIES

General accessories available

INT-KG-20/3CA

AET

VSD1/M

Inlet accessories available

Inlet accessories not available

Outlet accessories available

P-35

RI-35/C

PL-35

It must be checked that the accessory is suitable for the fan model

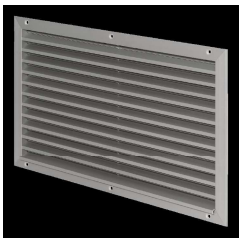

WGK-AL/597x397

Material	AL	Aluminium
Width	597	
Height	397	
Total amount	1	

Input Data

Strategy: Given volume flow	
Installation type	Ducted, exhaust air
Volume flow q_v	1,800 m³/h

Results

Airflow velocity v	2.11 m/s
Upstream area A_{BxH}	0.2370 m²
Free area A_{fr}	0.1027 m²
Width of installation opening b_{inst}	607 mm
Height of installation opening h_{inst}	407 mm
Weight m	3 kg

Acoustic results

	Δp_t [Pa]	$L_{W,A}$ [dB(A)]	63Hz [dB]	125Hz [dB]	250Hz [dB]	500Hz [dB]	1kHz [dB]	2kHz [dB]	4kHz [dB]	8kHz [dB]	$L_{W,NC}$ [dB]	$L_{W,NR}$ [dB]
Air-regenerated noise	16	48	35	43	42	43	47	32	18	< 15	46	47

Description

Rectangular external weather louvre as a protection of air conditioning systems against the direct ingress of rain, leaves and birds into fresh air and exhaust air openings. Ready-to-install component which consists of a border, aerofoil rain defence blades, and a bird mesh at the rear.

Spisak propisa, standarda i literature

SPISAK KORIŠĆENIH STANDARDA, PROPISA I LITERATURE

Prilikom projektovanja korišćeni su sledeći standardi, propisi i literatura:

- *Zakon o planiranju prostora i izgradnji objekata* (Sl.list Crne Gore, br. 064/17 od 06.10.2017.godine, 044/18 od 06.07.2018, 063/18 od 28.09.2018., 011/19 od 19.02.2019, 082/20 od 06.08.2020.)
- *Zakon o zaštiti i spašavanju* (Sl. list Crne Gore br. 13/07, 05/08, 86/09, 32/11 i 054/16 od 15.08.2018.)
- *Zakon o zaštiti i zdravlju na radu* (Sl.list Crne Gore, br. 034/14 od 08.08.2014, 044/18 od 06.07.2018.)
- *Zakon o zaštiti od buke u životnoj sredini* (Sl. list Crne Gore, br. 028/11 od 10.06.2012, 001/14 od 09.01.2014, 002/18)
- *Zakon o upravljanju otpadom* (Sl. list Crne Gore, br. 064/11 od 29.12.2011, 039/16 od 29.06.2016)
- *Zakon o životnoj sredini* (Sl. list Crne Gore, br. 052/16 od 09.08.2016)
- *Zakon o građevinskim proizvodima* (Sl. list Crne Gore, br. 018/14 od 11.04.2014, 051/17 od 03.08.2017.)
- *Pravilnik o načinu izrade i sadržini tehničke dokumentacije za građenje objekata* (Sl.list Crne Gore, br. 064/17 od 06.10.2017., 044/18 od 06.07.2018.)
- *Pravilnik o građevinskim proizvodima* (Sl.list Crne Gore, br. 082/16 od 29.12.2016, 041/18 od 28.06.2018.)
- *Pravilnik o graničnim vrijednostima buke u životnoj sredini, načinu utvrđivanja indikatora buke i akustičnih zona i metodama ocjenjivanja štetnih efekata buke* (Sl. list Crne Gore, br. 60/11)
- *Pravilnik o tehničkim zahtjevima za zaštitu garaža za putničke automobile od požara i eksplozija* (Sl. list Crne Gore", br. 09/12)

CJEVOVOD I FITING

- *MEST EN 10220:2011* – Šavne i bešavne čelične cijevi – Mjere i podužna masa
- *MEST EN 10216-1:2016* – Bešavne čelične cijevi za rad pod pritiskom – Tehnički uslovi isporuke – Dio 1: Nelegirane čelične cijevi sa utvrđenim svojstvima na sobnoj temperaturi
- *MEST EN 10217-1:2008*

Šavne čelične cijevi za rad pod pritiskom - Tehnički uslovi isporuke - Dio 1: Nelegirane čelične cijevi sa utvrđenim svojstvima na sobnoj temperaturi

- MEST EN 10255:2017

Cijevi od nelegiranog čelika pogodne za zavarivanje i narezivanje navoja - Tehnički zahtjevi za isporuku

FITING

- *MEST EN 10253-2:2009* – Bešavni cijevni lukovi;
- *MEST EN 10253-2:2009* – T komadi; Redukovani T-komadi;
- *ASTM* – Koncentrične redukcije;
- *EN 10242* – Pocinčani fiting;

PRIRUBNICE

- *MEST EN 1092-1:2019* – Prirubnice sa grlom PN16, PN25, PN40;
- *MEST EN 1092-1:2014* – Prirubnice ravne PN10;

Prilikom izrade projekta stabilnog sistema za automatsko gašenje požara gasom NOVEC 1230 korišćeni su navedeni važeći zakoni, pravilnici, tehnički propisi i standardi:

- *Zakon o planiranju prostora i izgradnji objekata* (Sl.list Crne Gore, br. 064/17 od 06.10.2017.godine, 044/18 od 06.07.2018, 063/18 od 28.09.2018., 011/19 od 19.02.2019, 082/20 od 06.08.2020.)
- *Zakon o zaštiti i spašavanju* (Sl. list Crne Gore br. 13/07, 05/08, 86/09, 32/11 i 054/16 od 15.08.2018.)
- *Zakon o zaštiti i zdravlju na radu* (Sl.list Crne Gore, br. 034/14 od 08.08.2014, 044/18 od 06.07.2018.)
- *Zakon o zaštiti od buke u životnoj sredini* (Sl. list Crne Gore, br. 028/11 od 10.06.2012, 001/14 od 09.01.2014, 002/18)
- *Zakon o upravljanju otpadom* (Sl. list Crne Gore, br. 064/11 od 29.12.2011, 039/16 od 29.06.2016)
- *Zakon o životnoj sredini* (Sl. list Crne Gore, br. 052/16 od 09.08.2016)
- *Zakon o građevinskim proizvodima* (Sl. list Crne Gore, br. 018/14 od 11.04.2014, 051/17 od 03.08.2017.)
- *Pravilnik o načinu izrade i sadržini tehničke dokumentacije za građenje objekata* (Sl.list Crne Gore, br. 064/17 od 06.10.2017., 044/18 od 06.07.2018.)
- *Pravilnik o građevinskim proizvodima* (Sl.list Crne Gore, br. 082/16 od 29.12.2016, 041/18 od 28.06.2018.)
- *Pravilnik o graničnim vrijednostima buke u životnoj sredini, načinu utvrđivanja indikatora buke i akustičnih zona i metodama ocjenjivanja štetnih efekata buke* (Sl. list Crne Gore, br. 60/11)
- *Pravilnik o tehničkim zahtjevima za zaštitu garaža za putničke automobile od požara i eksplozija* (Sl. list Crne Gore", br. 09/12)

LITERATURA

- *Instalacije za gašenje požara* – Zorana Sekulović, Marko Damnjanović, Martin Bogner, ETA, Beograd, 2014;
- *Glosar bezbednosti od požara sa rečnikom ISO 13943:2000*, Nikola Kleut, Duška Kleut, AGM Knjiga, Beograd 2008.
- *Tehnološke i mere bezbednosti od požara na osnovnim instalacijama*, Nikola Kleut, AGM Knjiga, Beograd 2016.
- *Instalacije i oprema za bezbednost od požara i eksplozija*, Nikola Kleut, AGM Knjiga, Beograd 2016.
- *Priručnik za kontrolisanje instalacija i uređaja za gašenje požara, inženjersko-tehnički priručnik*, Milan B. Erić, Erić E.G. Inženjering d.o.o., Čačak, 2017.

U Podgorici, Jun 2025 god.

Odgovorni inženjer:

Marko Đekić dipl.inž.maš.

NUMERIČKA DOKUMENTACIJA

Proračun i izbor opreme

PRORAČUN I IZBOR OPREME

Osnovni parametri sistema

KLASIFIKACIJA

Osnovni parametri sprinkler sistema su određeni na osnovu klase požarnog rizika prostora koji se štiti. Razvrstavanje prostora po klasama požarne opasnosti urađeno je u zavisnosti od namjene i požarnog opterećenja prostora i dato je u donjoj tabeli.

Klase požarne opasnosti

NAMJENA PROSTORA	***KLASA POŽARNE OPASNOSTI***
Bolnica	Grupa OH1

Projektni kriterijum za klase požarne opasnosti su prikazani u donjoj tabeli.

Hidraulički parametri

Klasa požarne opasnosti	*Intezitet kvašenja vodom*	*Površina jednovrem. dejstva*	*Min. vrijeme rada sistema*	*Maks. površina sprinklera*	*K - faktor mlaznice*	*p_{min} - min. pritisak na sprinkleru*
-	$[\frac{lit}{\min m^2}]$	*[m²]*	*[min]*	*[m²]*	$[\frac{lit}{\min bar}]$	*[bar]*
OH1	**5**	**72**	**60**	**12**	**80**	**0.5**

Minimalni potrebni pritisak na mlaznici je 0,5 (bar). Brzina vode ne smije prelaziti 10 m/s u cijevnoj mreži i 6m/s u armaturi. Pritisak u cjevovodima ne smije prelaziti 10 bar.

DIMENZIONISANJA CIJEVNIH INSTALACIJA

Dimenzionisanje cijevnih vodova je urađeno u skladu sa **MEST** EN 12845 standardom, koji propisuje da brzina vode u cjevovodima ne smije biti veća od 10 m/s.
Pored zahtjeva za brzinu proticanja, ispoštovan je i zahtjev, da radni pritisak vode na sprinkler mlaznici, ne smije biti veći od 5 bar, ni manji od 0,5 bar.

IZBOR SPRINKLER MLAZNICA

Izbor sprinkler mlaznica urađen je po **MEST EN 12845** propisima. Proračunska potrošnja vode po sprinkler mlaznici (**Q_S**):

$Q = K \bullet \sqrt{p}$ [l/min] gdje je:

K - koeficijent isticanja mlaznice (faktor mlaznice)

p - pritisak ispred mlaznice, [bar]

Odnosno, $60 = k \cdot \sqrt{0.5} \rightarrow k = 60/\sqrt{0.5} = 84{,}85 \rightarrow k = 80$

Prilikom izbora sprinklera treba uzeti u obzir geometrijske dimenzije prostorije kao i druge građevinske uslove, zatim postojeći pritisak u mreži cjevovoda i potrebnu količinu vode.
Izabrane su stojeće i viseće sprinkler mlaznice:

U prostoru sprinkler soba i hodnika izabrane su viseće sprinkler mlaznice debljina ampula 5mm, proizvođač VIKING, tip mlaznice ***VK110: Standard Response Pendent Sprinklers***

U prostoru sprinkler podstanice izabrane su stojeće sprinkler mlaznice debljina ampula 5mm, proizvođač VIKING, tip mlaznice ***VK100: Standard Response Uprigth Sprinklers***

PAD PRITISKA U INSTALACIJI

Za proračun pada pritiska koristi se formula Hezen-Williams-a:

Dp = 6,05 x 105 x d-4,85 x Q1,85 x C-1,85 x l

pri čemu je:

C - konstanta za cijevi
C = 120 konstanta za čelične cijevi
Dp - pad pritiska u barima
Q - protok vode kroz cijevovod u [l/min].
d - unutrasnji prečnik cijevi u milimetrima
l - ukupna dužina cijevovoda (stvarna+ekvivalentna) u metrima

Ukupan pad pritiska u instalaciji jednak je zbiru gubitaka pritiska u cjevovodima, lokalnih gubitaka zbog otpora u armaturi i geodetske visine najviše sprinkler mlaznice u instalaciji.

Za proračun pada pritiska najnepovoljniji uslov je istovremeno otvaranje 15 sprinkler mlaznica u najudaljenijem dijelu.
Proračun je urađen sa sledećim početnim uslovima:

ΔP=ΔP1+ΔP2+ΔPm+H
ΔP -ukupan pad pritiska [bar]
ΔP1-pad pritiska zbog otpora u cijevima [bar]
ΔPm= 0.5 – ukupan otpor na mlaznici [bar]
ΔP2-pad pritiska zbog otpora u armaturi [bar]
H - geodetska visina [bar]

ΔP1+ΔP2 po HAZEN-WILLIAMS-u:

ΔP12= ΔP1+ΔP2= 6.05 x 105 x C-1.85 x d4.87 x Q1.85 x L [bar]

C - konstanta za čelične cijevi
za čelične cijevi je C=120 pa je:

ΔP12 = ΔP1+ΔP2 = K x Q1.85 x L [bar]
Q-protok vode [l/min]
L - stvarna + ekvivalentna dužina [m]

ΔP12= ΔP1+ΔP2= K x Q1.85 x L [bar]

Numerički proračun je urađen uz pomoć software-a AACALC7 i dat je tabelarno u prilogu koji slijedi.

HIDRAULIČKI PRORAČUN

Na osnovu proračuna iz programa AACALC dobijeni su sledeći rezultati:

Dio objekta:	Protok (l/min)	Pad pritiska (bar)
Bolnica	**408.8**	**4.38**

Pad pritiska u instalaciji je:
Δp= 4.38 bar
Stvarna maksimalna potrošnja vode je:
Q= 408 l/min
Podaci za odabir pumpe:
p=4.4 bar
Q=430 l/min

U Podgorici, Jun 2025 god.

Odgovorni inženjer:

Marko Đekić dipl.inž.maš.

_____

```
            Project ref/no = Bolnica Bijelo Polje
             Client ref/no = -
           Address/notes 1 = -
           Address/notes 2 = -
           Address/notes 3 = -
           Building ref/no = -
      Hazard classification = OH1
  System/design ref (MR/MF) = -
       Installation ref/no = -
         Drawing(s) ref/no = -
    Drawing(s) dates/issues = -
    Reviewer/Insurance/Fire = -
             Designer/Dept = -
                Comments 1 = -
                Comments 2 = -
   Start X Y + building DXF = 0 0 None
          Design area sq.m = 72.0
     Elbows welded above mm = 65
          Specific gravity = 1.00
     Node no for zero datum = 0
          Design authority = EN12845 Rules (latest)   using Hazen-Williams formula

        Installer/designer = Program provided free by Alan Ashfield

                             The user name and contact details are stored
                             in the file USERINFO.TXT which you can either
                             delete and re-enter OR amend with NOTEPAD.



           Telephone no(s) =
                 FAX no(s) =
              Registration = 23552 from 19 April 2023 [14053E97]
                 Reference = IngInvest on ADMINISTRATOR  to Adobe PDF
                 Data file = ++LASTVERSIONOFLASTJOB.AHC

       All pages checked by   . . . . . .

       Sprinklers operating =     6
          Area of operation =    72.00  sq.m
          Max area per head =    12.000 sq.m
           Min head density =     5.000 mm/min at node   290
          Min head pressure =     0.563 bars   at node   290
          Max head pressure =     1.020 bars   at node   320
            Max head height =    22.500 m
                      Pipes =    24
            Min pipe size =    25     mm
          Max pressure drop =     0.534 bars   in pipe   100   110
    Max pressure drop/metre =    66.52  mbar/m in pipe   320   330
               Max velocity =     3.57  m/s    in pipe   320   330
       Hydrants / hosereels =     0     L/min
         Volume of pipework =     0.758 cu.m
Actual density of discharge =    10.22  mm/min over 6.080 sq.m
     Four most remote heads =   270    290    340    360

                 SOURCE DUTY =   408.8   L/min at 4.382 bars [node 100]
```

OPERATING SPRINKLER HEADS AND HYDRANTS

Node no	Size mm	"K" factor	Flows in L/min Min	Actual	+%	A r e a sq.m	Density mm/min Min	Actual	Pipe mm	MRH #	Height m	P r e s s u r e s b a r Min	Normal	V e l	Total
250	20.0	80.00	60.0	79.3	32	12.000	5.00	6.61	32		22.500	0.35	0.983		0.983
270	20.0	80.00	60.0	63.1	5	12.000	5.00	5.26	25	1	22.500	0.35	0.623		0.623
290	20.0	80.00	60.0	60.0	0	12.000	5.00	5.00	25	2	22.500	0.35	0.563		0.563
320	20.0	80.00	60.0	80.8	35	12.000	5.00	6.73	32		22.500	0.35	1.020		1.020
340	20.0	80.00	60.0	64.4	7	12.000	5.00	5.36	25	3	22.500	0.35	0.647		0.647
360	20.0	80.00	60.0	61.2	2	12.000	5.00	5.10	25	4	22.500	0.35	0.584		0.584

HYDRAULICALLY SIGNIFICANT PIPES

N o d e s Start	End	S i z e mm	ref	F l o w L/min	Length m	Direction <>~slope	Fittings +options	Equiv len m	Vel m/s	Static m	Height end m	P r e s s u r e s b a r Start	Frict	V e l	E n d
100	110	100	MW	408.8	2.800	South	W5TGVSV+0.5	37.81	0.78		0.000	4.382	0.534		3.848
110	120	100	MW	408.8	2.500	Up	3WGV+0.300b	5.01	0.78	2.500	2.500	3.848	0.306		3.297
120	130	100	MW	408.8	1.700	South	W	1.40	0.78		2.500	3.297	0.003		3.294
130	140	100	MW	408.8	5.000	East	W	1.40	0.78		2.500	3.294	0.005		3.289
140	150	100	MW	408.8	20.000	Up	W	1.40	0.78	20.000	22.500	3.289	0.018		1.311
150	160	100	MW	408.8	0.700	South	WT	7.50	0.78		22.500	1.311	0.007		1.304
160	170	100	MW	408.8	3.200	East	W	1.40	0.78		22.500	1.304	0.004		1.300
170	180	100	MW	408.8	9.000	South	WT	7.50	0.78		22.500	1.300	0.014		1.287
180	190	100	MW	408.8	1.000	West	W	1.40	0.78		22.500	1.287	0.002		1.285

HYDRAULICALLY SIGNIFICANT PIPES

Nodes Start	End	Size mm	ref	Flow L/min	Length m	Direction <>~slope	Fittings +options	Equiv len m	Vel m/s	Static m	Height end m	Pressures bar Start	Frict	Vel	End
200	210	100	MW	408.8	10.000	East	W	1.40	0.78		22.500	1.267	0.009		1.257
210	220	100	MW	408.8	8.000	North	W	1.40	0.78		22.500	1.257	0.008		1.250
220	240	100	MW	408.8	0.300	North	T	6.10	0.78		22.500	1.250	0.005		1.244
240	250	32	MW	202.5	2.000	East	2T	4.20	3.32		22.500	1.244	0.261		0.983
250	260	25	MW	123.1	3.300	East	T	1.50	3.50		22.500	0.983	0.308		0.675
260	270	25	MW	63.1	0.500	South	ET	2.27	1.80		22.500	0.675	0.052		0.623
260	280	25	MW	60.0	3.800	East	E	0.77	1.71		22.500	0.675	0.078		0.597
280	290	25	MW	60.0	0.500	South	2E	1.54	1.71		22.500	0.597	0.035		0.563
240	300	100	MW	206.3	1.600	North	T	6.10	0.40		22.500	1.244	0.002		1.242
300	320	32	MW	206.3	2.000	East	ET	3.10	3.38		22.500	1.242	0.222		1.020
320	330	25	MW	125.5	3.300	East	T	1.50	3.57		22.500	1.020	0.319		0.701
330	340	25	MW	64.4	0.500	South	ET	2.27	1.83		22.500	0.701	0.054		0.647
330	350	25	MW	61.2	3.800	East	E	0.77	1.74		22.500	0.701	0.080		0.620
350	360	25	MW	61.2	0.500	South	2E	1.54	1.74		22.500	0.620	0.036		0.584

KEY TO FITTINGS AND PIPEWORK QUANTITIES (Above pipes only)

E = Screwed elbow, W = Welded elbow, H = 45deg elbow, T = Branch tee/cross, J = Through tee
GV = Gate valve, SV = Swinging valve, MV = Mushroom valve, BV = Butterfly valve, GL = Globe valve

MW = Medium Weight steel [BS1387] "C"wet=120 "C"dry=100(d) "C"nfpa=120 Total = 106.00 m

Sizes	=	25	32	100 mm
Bores	=	27.31	35.97	105.14 mm
Lengths	=	16.20	4.00	85.80 m

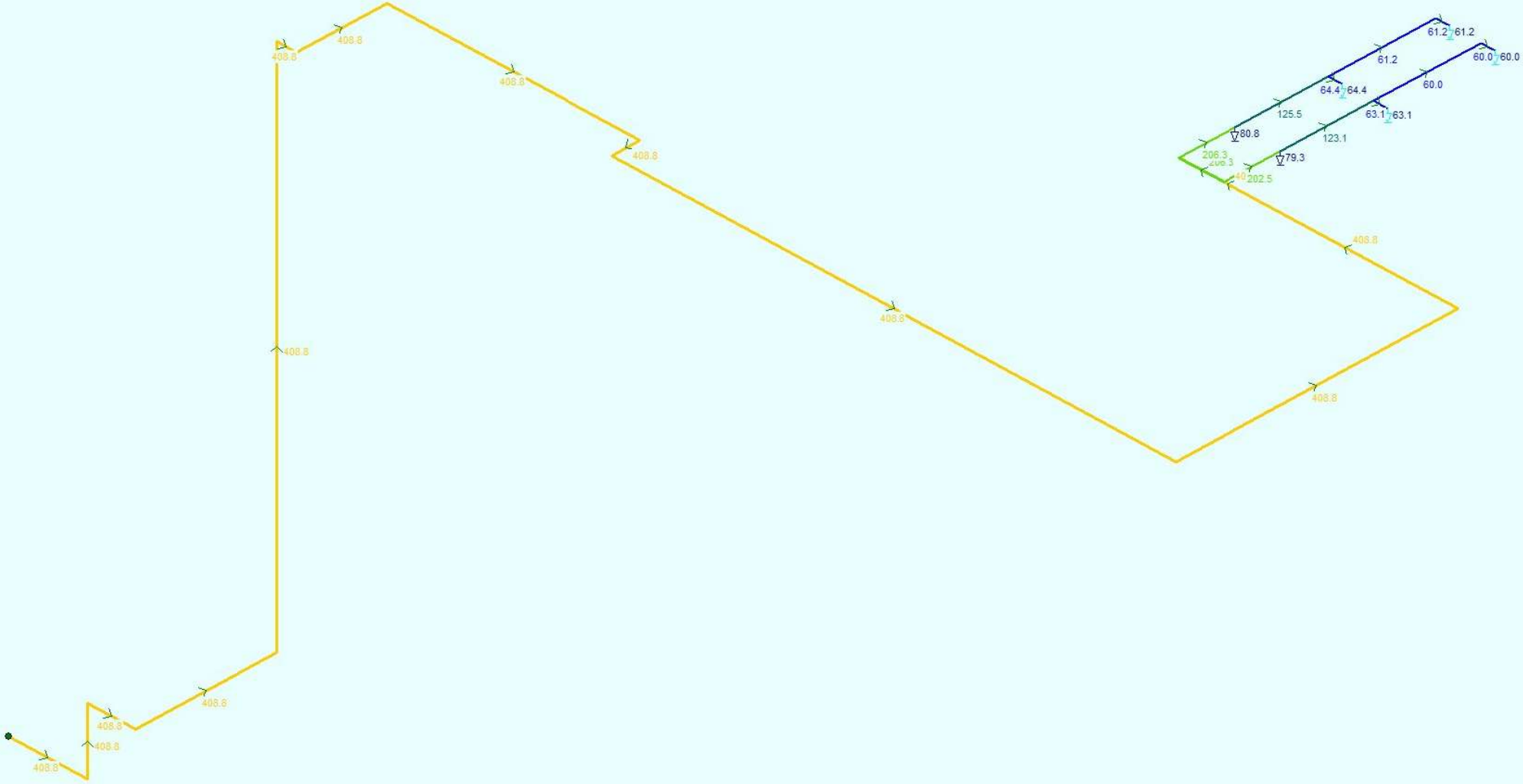
408.8
408.8
408.8
408.8
408.8
408.8
408.8
408.8
408.8
408.8
408.8
408.8
408.8
61.2
61.2
61.2
60.0
60.0
60.0
64.4
64.4
125.5
63.1
63.1
80.8
123.1
79.3
206.3
206.3
40
202.5

Proračun količine vazduha za ventilacije sprinkler prostorije i odabir ventilatora

PRORAČUN VENTILACIJE
PROSTORIJE SA SPRINKLER POSTROJENJEM

A) VENTILACIJA PROSTORIJE ZA SPRINKLER POSTROJENJE

Opšti podaci iz projekta za sprinkler sisteme:

Električna snaga radne pumpe u sprinkler stanici: Pel = 11kW
Električna snaga jockay pumpe u sprinkler stanici: Pel = 1.85kW
Ukupna električna snaga pumpi: Pel = 12.85kW Snaga kalorifera:
Pel = 5kW

Određivanje potrebne količine vazduha za ventilaciju prostorije:

Stepen korisnosti $\eta = 0.70$

Disipacija toplote motora pumpi:

$Qdis = (Pel/\eta) - Pel = (17.85/0.70) - 17.85 = 7.43kW$

Potrebna količina vazduha za ventilaciju prostorije:

$$L = Qdis/\rho x c p x \Delta t = (7430/(1.2 \times 1 \times (45-30))) \times 3.6 = 1188 m^3/h$$

Potrebna količina vazduha prema broju izmjena: preporuka: 20 - 30 izm/h

$L = 21 \times 3 \times 25 = 1575\ m^3/h$
Usvaja se količina vazduha: $L = 1600\ m^3/h$

Usvaja se ventilator sa karakteristikama:

Tip	=	HC-35-4M/H	
V	=	1880	m^3/h
H	=	65	Pa
N	=	140	W
n	=	1350	o/min

Proizvođač: Sodeca

PRORAČUN PADA PRITISKA U KANALSKOJ MREŽI

Br.dionice	Širina	Visina	Prečnik	Ekviv. Preč	Površina kanala		Protok u m^3/h	Protok u m^3/s	Protok u l/s	Brzina	Hrapavost	Rejnoldsov broj	Koef trenja	Pad pritiska usled trenja	Dužina dionice		Lokalni otpori	Pad prit.usled lokaln otpora	Ukupni pad pritiska
n	a	b	D	D_{ekv}	A	D_h	Vh	Vs	q	v	e	Re	λ	R	l	R*l	Σς	Z	Rl+Z
-	mm	mm	mm	mm	m^2	mm	m^3/h	m^3/s	L/s	m/s	mm	-	-	Pa/m	m	Pa	-	Pa	Pa
SISTEM:			***ntilacija sprinkler prostorije-svježi vazdu***				temperatura vazduha:			20	[^{O}C]	kinematska viskoznost:				0.00001500			[m^2/s]
1	400	300		381	0.120	343	1650	0.46	458	3.82	0.15	87,302	0.021	0.47	1.0	0.47	2.00	17.5	18.0
																		Pad pritiska na protivkišnoj žaluzini	15
																		Pad pritiska na zaštitnoj mreži	15
																		Ukupni pad pritiska:	48.0
																		Ukupan pad pritiska uvećan za 15%	48

GRAFIČKA DOKUMENTACIJA

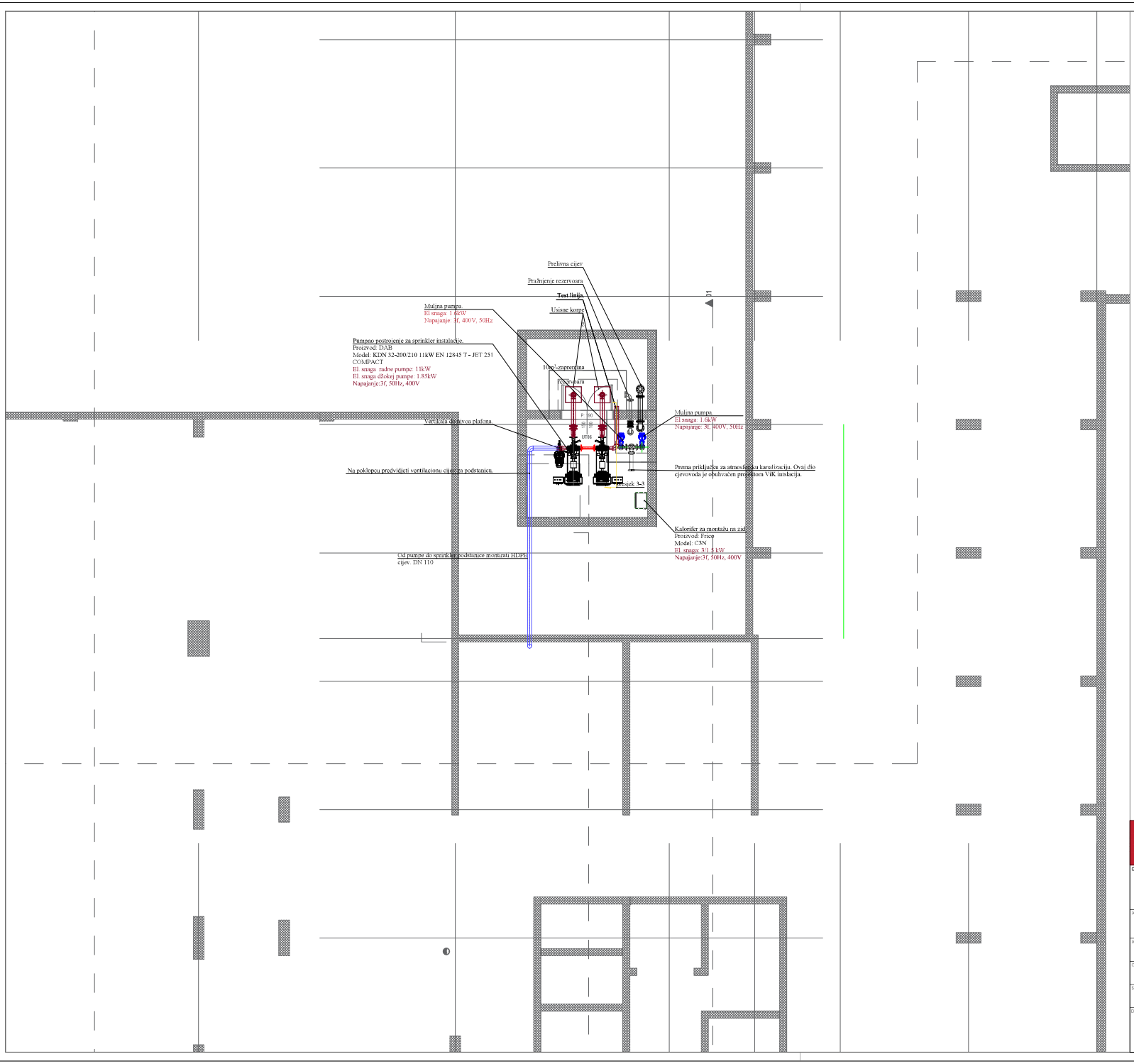

PROJEKTANT: **INGINVEST d.o.o.** Danilovgrad, Crna Gora	INVESTITOR: JZU Opšta bolnica Bijelo Polje
Objekat: Rekonstrukcija postojećeg objekta bolnice u Bijelom Polju - dio lamela "C"	Lokacija: UP 29a u zahvatu DUP-a "Medanovići", koja se sastoji od katastarskih parcela 1933/1, 1933/12, 1964/7, 1940, 1963/3 i 1933/17 KO Bijelo Polje
Autor: ING INVEST DOO DANILOVGRAD	
Vodeći projektant: Arh. Ilija Radulović, spec.sci. UPI 107/7-575/2	Vrsta tehničke dokumentacije: Glavni projekat / Oznaka projekta: 72/04
Odgovorni projektant: Marko Dekić, dipl.mat.inž. bulicence UPI 107/7-479/2	Dio tehničke dokumentacije: Mašinski projekat Sprinkler instalacije / Razmjera: 1:50
Saradnici: Oljvera Ćirković, dipl.inž.mat., Kristina Nikolić, dipl.inž.mat.	Prilog: Pozicija rezervoara / Br. priloga: 00 / Br. strana: 00
Datum izrade i IVP: 06.2025	Datum revizije

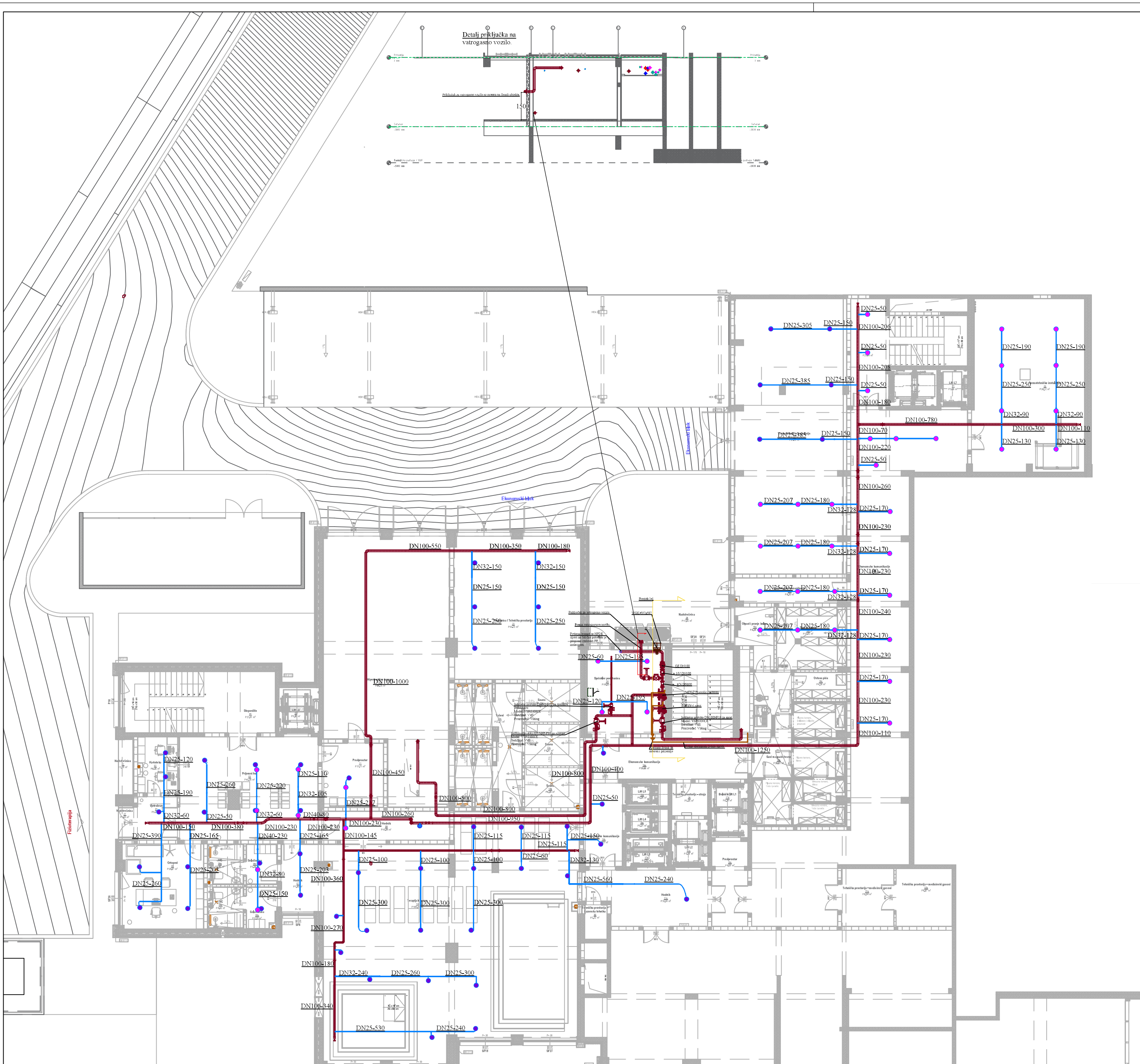

Mlaznice stojeće za montažu u prostorima hodnika
Temepratura aktiviranja:68°C

Mlaznice viseće
za montažu u prostorima soba i hodnika
Temepratura aktiviranja:68°C

1. Pumpno postrojenje za sprinkler instalacije.
Proizvod: DAB
Model: KDN 32-200/190 7.5kW EN 12845 T - JET 251 COMPACT
El. snaga radne pumpe: 7.5kW
El. snaga džokej pumpe: 1.85kW
Napajanje:3f, 50Hz, 400V

2. Kalorifer za montažu na zid.
Proizvod: Frico
Model: C5N
El. snaga: 5/2.5 kW
Napajanje:3f, 50Hz, 400V

4.Ventilator za izvlačenje otpadnog vazduha iz sprinkler podstanice
Proizvod: Sodeca ili slično
Model: HC-35-4M/H
Protok: 1880m^3/h
Pad pritiska:65Pa
El snaga: 140W
Napajanje: 1f, 220V, 50Hz

Glavna trasa sprinkler instalacija
Sporedna trasa sprinkler instalacija

PROJEKTANT: **INGINVEST d.o.o.** Danilovgrad, Crna Gora	INVESTITOR: JZU Opšta bolnica Bijelo Polje
Objekat: Rekonstrukcija postojećeg objekta bolnice u Bijelom Polju - dio lamela "C"	Lokacija: UP 29a u zahvatu DUP-a "Medanovići", koja se sastoji od katastarskih parcela 1933/1, 1933/12, 1964/7, 1940, 1963/3 i 1933/17 KO Bijelo Polje
Autor: ING INVEST DOO DANILOVGRAD	
Vodeći projektant: Arh. Ilija Radulović, spec.sci. UPI 107/7-575/2	Vrsta tehničke dokumentacije: Glavni projekat; Oznaka projekta: 72/24
Odgovorni projektant: Marko Đekić, dipl.maš.inž, br.licence UPI 107/7-479/2	Dio tehničke dokumentacije: Mašinski projekat Sprinkler instalacije; Razmjera: 1:50
Saradnici: Olivera Ćirković, dipl.inž.maš. Kristina Nikolić, dipl.inž.maš.	Prilog: Suteren- Raspored sprinkler opreme; Br. priloga: 01; Br. strane: 01
Datum izrade i M.P: 06.2025	Datum revizije

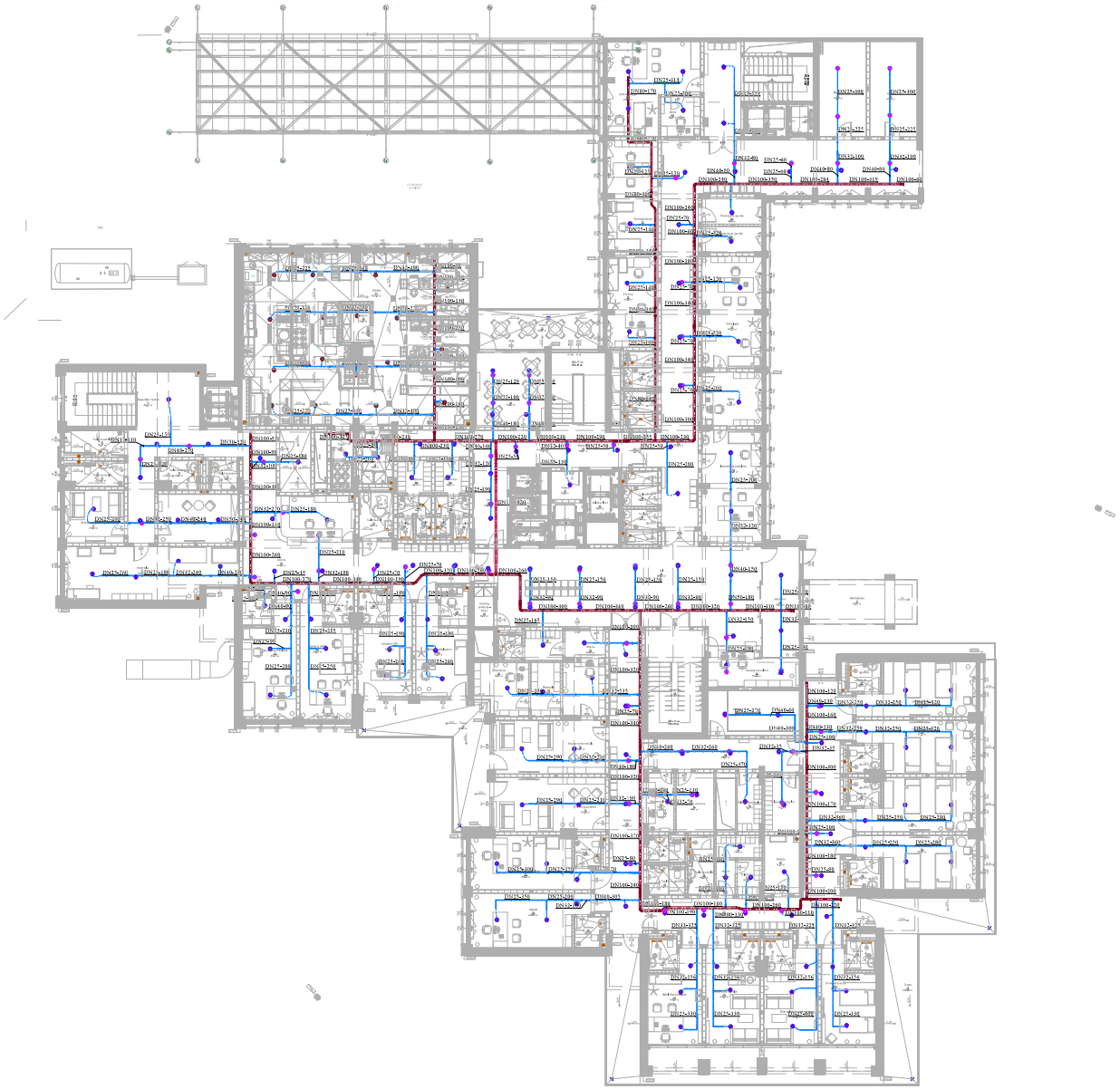

Mlaznice stropne
za montažu u prostorima hodnika
Temperatura aktiviranja 68°C

Mlaznice visoke
za montažu u prostorima soba i hodnika
Temperatura aktiviranja 68°C

Mlaznice visoke
za montažu u dijelu kohvine
Temperatura aktiviranja 93°C

Glavna mara sprinkler instalacija
Sporedna mara sprinkler instalacija

PROJEKTANT
INGINVEST d.o.o.
Gradnograd, Crna Stara

INVESTITOR
JZU Opšta bolnica Bijelo Polje

Objekt
Rekonstrukcija postojećeg dijelnika bolnice u Bijelom Polju – do formalu "C"

Lokacija
UP 2/Sva u zahvatu DUP-a "Medanovci", koja se sastoji od katastarskih parcela 1933/1, 1933/12, 1934/2, 1940, 1953/3 i 1953/17 KO Bijelo Polje

Autor
INGINVEST DOO DANILOVGRAD

Vrsta projekta
Arh.Bijo Radulović, spec.arh.
UP/I 1/2 / 7-2/10

Vrsta tehničke dokumentacije
Glavni projekt

Oznaka projekta
72/24

Odgovorni projektant
Marko Gerbić, dipl.inž.arh.; bulevarac UP/I 1/2 / 7-2/10

Dokumentacija
Nadzorni projekt
Sprinkler instalacija

Nacrtana
1:50

Nacrtali
Glavna Grozvić, dipl.inž.arh.
Kristina Hrabić, dipl.inž.arh.

Ulog
Oznaka Projekta
Raspored sprinkler opreme

Ilustracija
IG
Ilustracija
IG

Datum izrazu: NZ
09_2025

Datum revizije

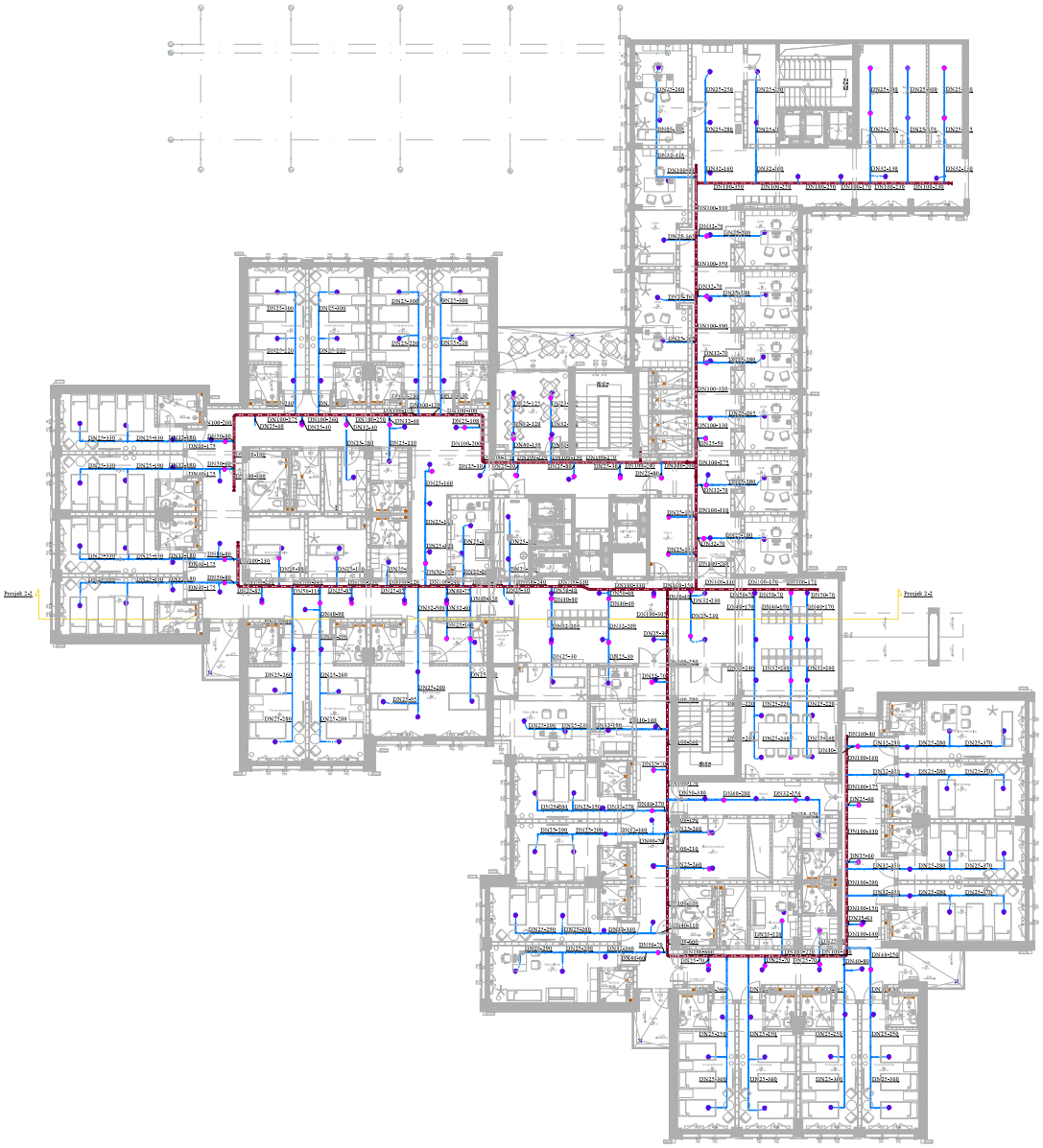

Mlaznice stropne
za montažu u prostorima hodnika
Temperatura aktiviranja 68°C

Mlaznice visoče
za montažu u prostorima soba i hodnika
Temperatura aktiviranja 68°C

Glavna trasa sprinkler instalacija
Sporedna trasa sprinkler instalacija

PROJEKTANT **INGINVEST d.o.o.** Gradnograd, Crna Bara	INVESTITOR **ZU Opšta bolnica Bijelo Polje**
Objekat Rekonstrukcija postojećeg objekta bolnice u Bijelom Polju – do faznila "C"	Lokacija UP 29 u zahvatu DUP-a "Medanovići", koja se sastoji od katastarskih parcela 1593/1, 1593/2, 1594/2, 1940, 1953/3 i 1953/7 KO Bijelo Polje
Autor INGINVEST DOO DANILOVGRAD	
Vodeći projektant Arh. Ilija Radulović, spec.o.o. UP I 1/07 1-2/10	Vrsta tehničke dokumentacije Glavni projekat	Oznaka projekta 72/24
Odgovorni projektant Marko Gerić, dipl.inž.el., tehničarna UP I 1/07 1-2/10	Dokumentacija dokumentacije Mašinski projekat Sprinkler instalacija	Razmjera 1:50
Saradnici Glavna Gerić, dipl.inž.el., Kristina Mirdić, dipl.inž.el.,	Ulog Opšta u Bijelom Polju Raspored sprinkler sprinkler	Sv.ukupno 03	Sv.dozvo 03
Datum izrade: MJ 09_2024	Datum revizije	

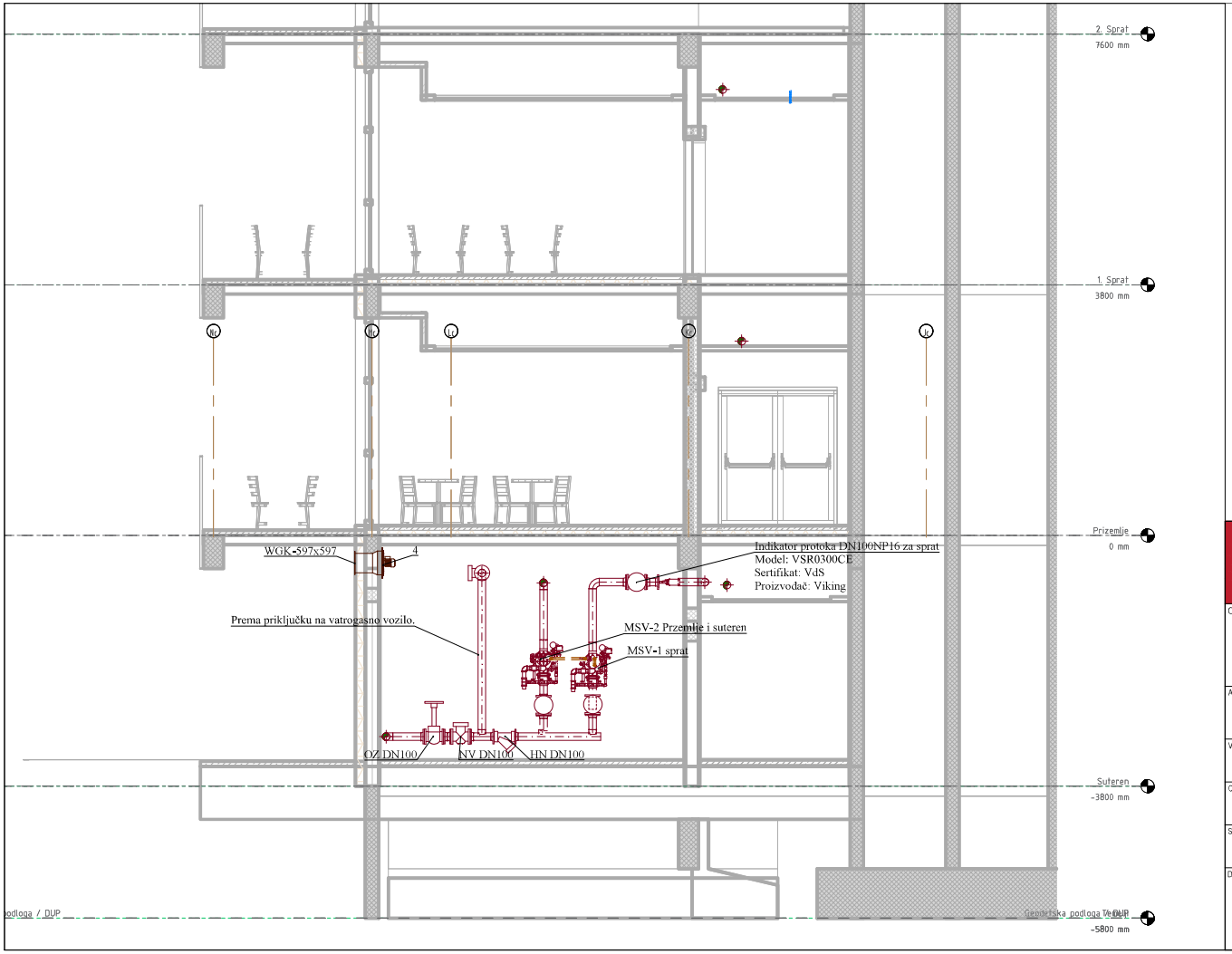

4.Ventilator za izvlačenje otpadnog vazduha iz sprinkler podstanice
Proizvod: Sodeca ili slično
Model: HC-35-4M/H
Protok: 1880m³/h
Pad pritiska:65Pa
El snaga: 140W
Napajanje: 1f, 220V, 50Hz

PROJEKTANT: **INGINVEST d.o.o.** Danilovgrad, Crna Gora	INVESTITOR: JZU Opšta bolnica Bijelo Polje		
Objekat: Rekonstrukcija postojećeg objekta bolnice u Bijelom Polju - dio lamela "C"	Lokacija: UP 29a u zahvatu DUP-a "Medanovići", koja se sastoji od katastarskih parcela 1933/1, 1933/12, 1964/7, 1940, 1963/3 i 1933/17 KO Bijelo Polje		
Autor: ING INVEST DOO DANILOVGRAD			
Vodeći projektant: Arh. Ilija Radujković, spec.sci. UPI 107/7-575/2	Vrsta tehničke dokumentacije: Glavni projekat	Oznaka projekta: 72/24	
Odgovorni projektant: Marko Đekić, dipl.maš.inž, br.licence UPI 107/7-479/2	Dio tehničke dokumentacije: Mašinski projekat Sprinkler instalacije	Razmjera: 1:50	
Saradnici: Olivera Ćirković, dipl.inž.maš. Kristina Nikolić, dipl.inž.maš.	Prilog: **Presjek 1-1**	Br. priloga: 04	Br. strane: 04
Datum izrade i M.P 05.2025	Datum revizije		

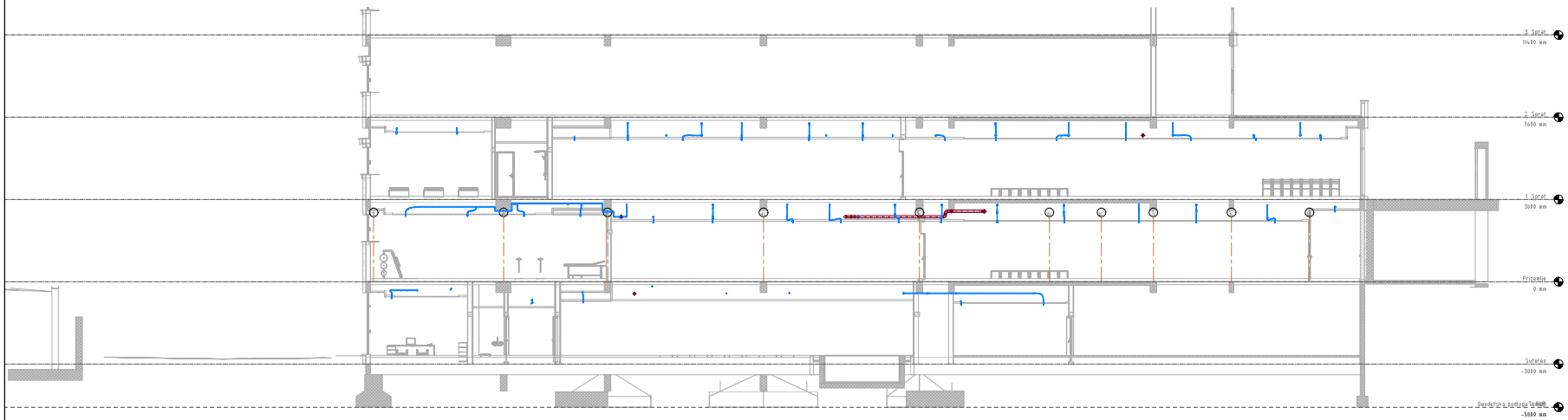

INGINVEST d.o.o. Sarajevo	INVESTITOR: JU Opća bolnica Bihać		
NAZIV: Rekonstrukcija postojećeg objekta u dijelu ulaz i kafeterija	NAZIV: LOT 2Ra u sastavu JU Opće "Mehmed-beg", koji se sastoji od: Rekonstrukcije postojećeg: PRIZEM, I SPRAT, II SPRAT, III SPRAT, PRIZEM I SPRAT, IV SPRAT		
Sadržaj:			
Glavni projektant: Arh.Ajla Hadžić, dipl.ing.	Glavni projektant: Mehmedović Nermin	Broj projekta: 1/24	
Odgovorni projektant: Hadžić Ahmed, dipl.ing.arh.	Odgovorni izvršilac: Mehmedović Nermin	Razmjera: 1:50	
Izradio: Ajanović Ermin, dipl.ing.arh. Hadžić Ahmed, dipl.ing.arh.	Broj: Projekt: 24	Datum: 01	Revizija: 01
Glavni inženjer: Fazlić Ermin	Mjesto izrade:		

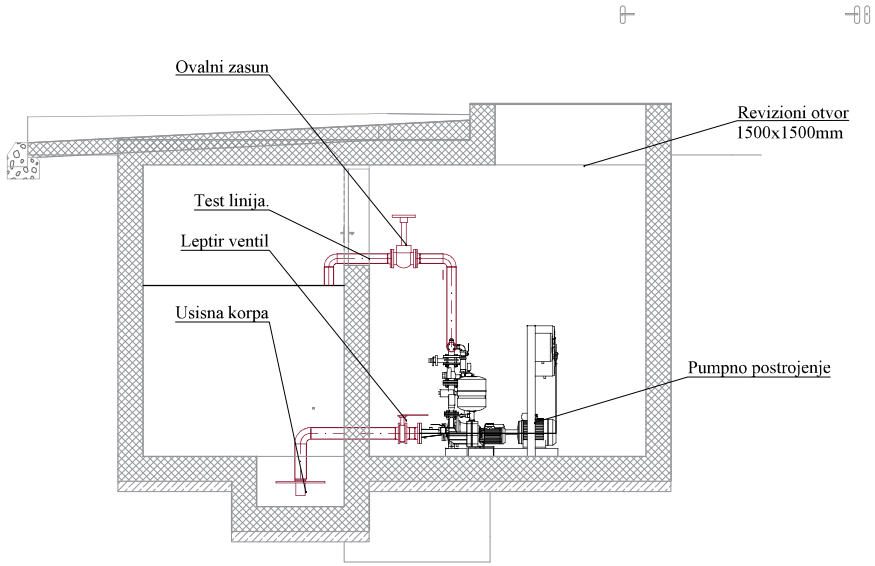

PROJEKTANT: **ING**INVEST d.o.o. Danilovgrad, Crna Gora	INVESTITOR: JZU Opšta bolnica Bijelo Polje	
Objekat: Rekonstrukcija postojećeg objekta bolnice u Bijelom Polju - dio lamela "C"	Lokacija: UP 29a u zahvatu DUP-a "Medanovići", koja se sastoji od katastarskih parcela 1933/1, 1933/12, 1964/7, 1940, 1963/3 i 1933/17 KO Bijelo Polje	
Autor: ING INVEST DOO DANILOVGRAD		
Vodeći projektant: Arh. Ilija Radulović, spec.sci. UPI 107/7-575/2	Vrsta tehničke dokumentacije: Glavni projekat	Oznaka projekta: 72/24
Odgovorni projektant: Marko Đekić, dipl.maš.inž, br.licence UPI 107/7-479/2	Dio tehničke dokumentacije: Mašinski projekat Sprinkler instalacije	Razmjera: 1:50
Saradnici: Olivera Ćirković, dipl.inž.maš. Kristina Nikolić, dipl.inž.maš.	Prilog: Presjek 3-3	Br. priloga: 06 / Br. strane: 06
Datum izrade i M.P 06.2025	Datum revizije	

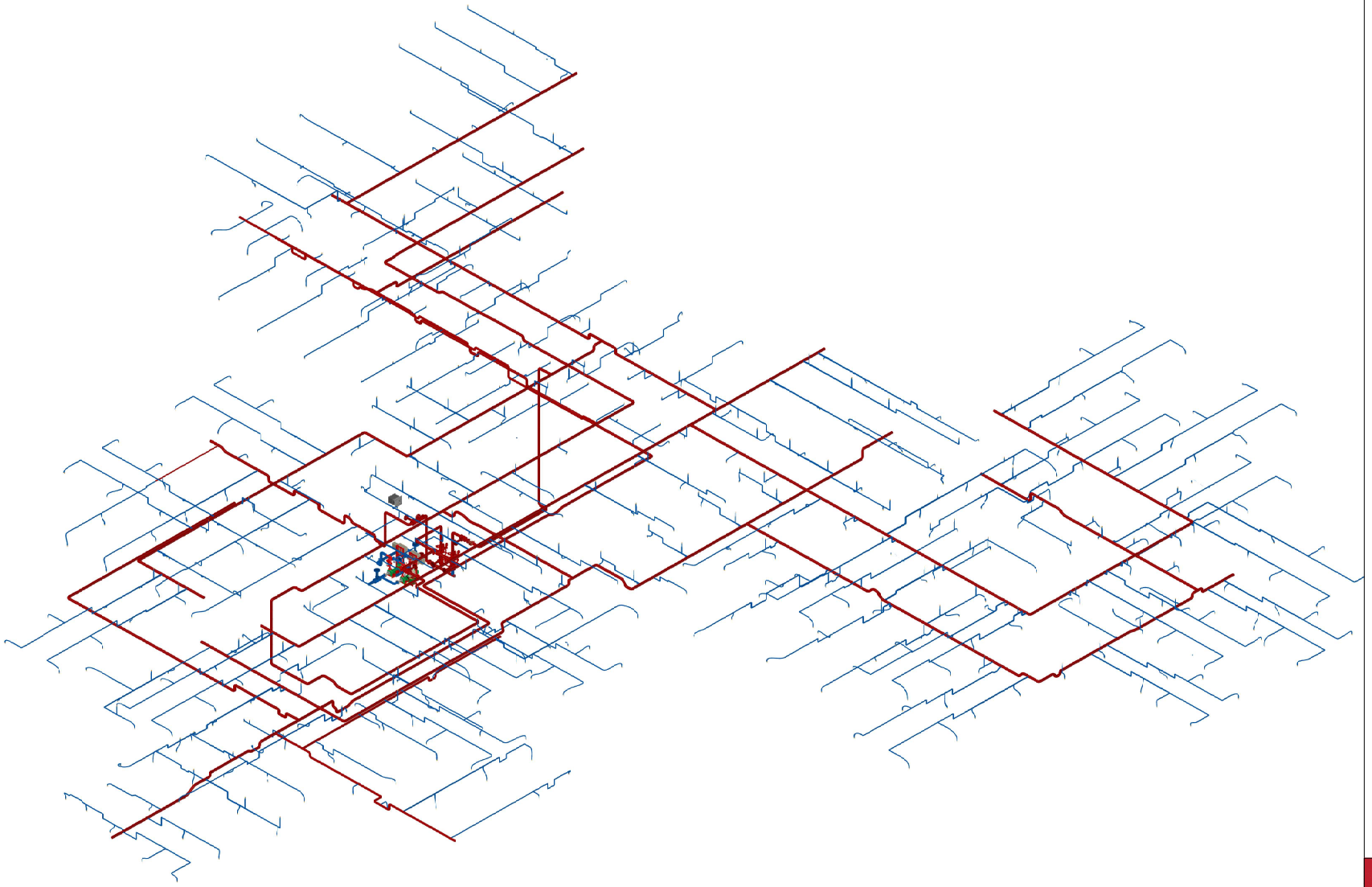

PROJEKTANT **INGINVEST d.o.o.** Gerilingrad, Sme Sisre	INVESTITOR **JZU Opšta bolnica Bijelo Polje**
Objekat Rekonstrukcija postojećeg objekta bolnice u Bijelom Polju - do Jamila "C"	Lokacija UP 23ku u zahvatu DUP-a "Medimovac", koja se sastoji od katastarskih parcela 1933/1, 1933/12, 1934/7, 1940, 1963/3 i 1933/17 KO Bijelo Polje
Autor INGINVEST DOO DANILOVGRAD	
Vodeći projektant Ani, dipl. Ruđ.Bud., spec.urb. UPI 107 4-2/13	Izvoljeni projekt Oznaka projekta Oznaka projekta 72.04
Odgovorni projektant Marta Gavić, dipl.mašinski, bulevarna UPI 107 7-2/13	Da tehnička dokumentacija Mašinski projekat Opre ilar mašinskoja Vrsta 1.50
Saradnici Oliveta Ćirović, dipl.mašinski, Kristina Vrbić, dipl.mašinski,	Ulog Ai sonometrija Ov.ulogu 07 Ov.stranu 07
Datum izrade NAP 09_2025	Datum revizije

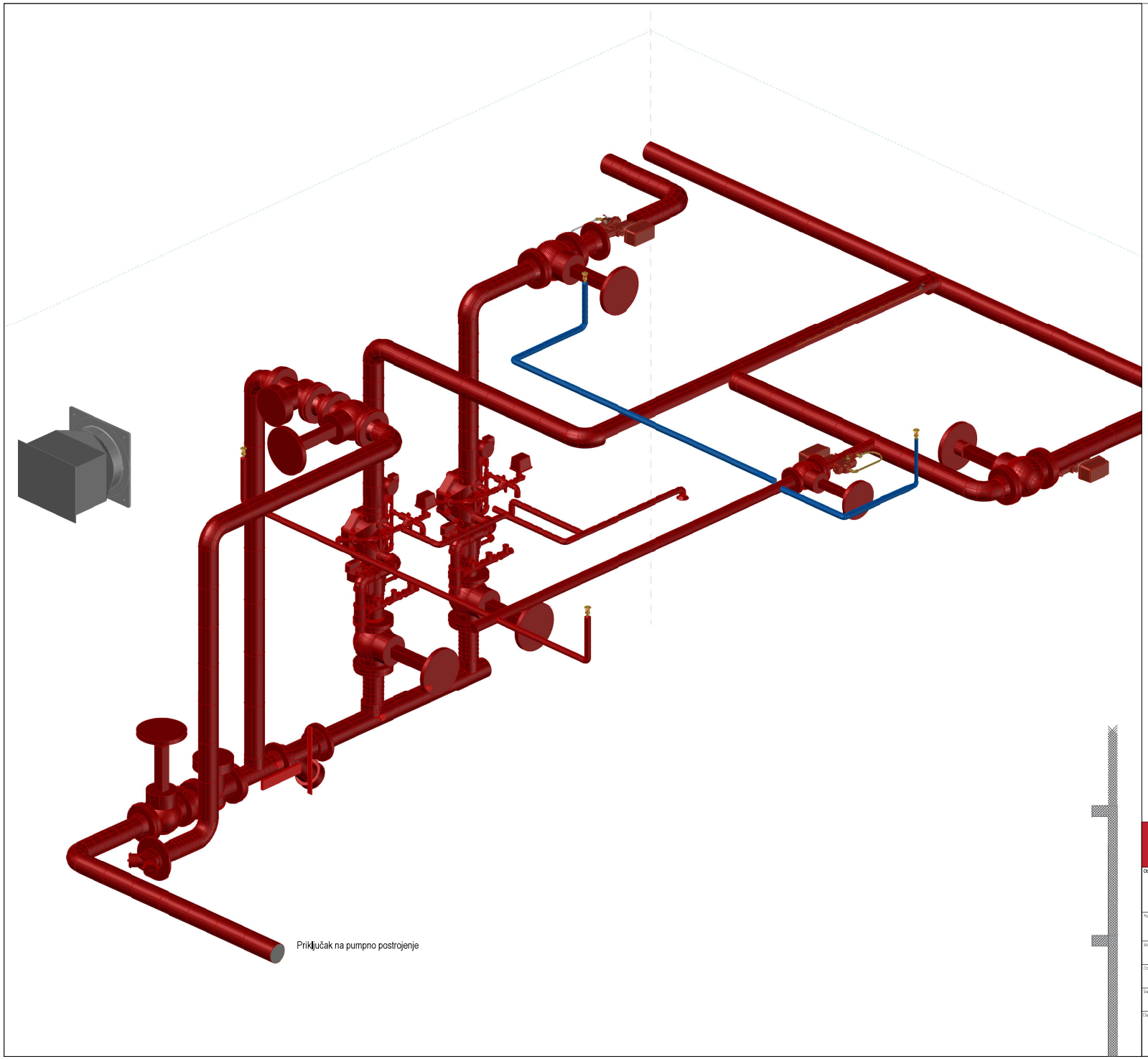

PROJEKTANT: **INGINVEST d.o.o.** Danilovgrad, Crna Gora	INVESTITOR: JZU Opšta bolnica Bijelo Polje
Objekat: Rekonstrukcija postojećeg objekta bolnice u Bijelom Polju - dio lamela "C"	Lokacija: UP 29a u zahvatu DUP-a "Medanovići", koja se sastoji od katastarskih parcela 1933/1, 1933/12, 1964/7, 1940, 1963/3 i 1933/17 KO Bijelo Polje
Autor: INGINVEST DOO DANILOVGRAD	
Vodeći projektant: Arh. Ilija Radulović, spec.sci. UPI 107/7-575/2	Vrsta tehničke dokumentacije: Glavni projekat / Oznaka projekta: 72/24
Odgovorni projektant: Marko Dekić, dipl.mat.inž. bulicence UPI 107/7-479/2	Dio tehničke dokumentacije: Mašinski projekat Sprinkler instalacije / Razmjera: 1:50
Saradnici: Oljvera Ćirković, dipl.inž.mat., Kristina Nikolić, dipl.inž.mat.	Prilog: Aksonometrija podstanice / Br. priloga: 08 / Br. strana: 08
Datum izrade i IAP: 06.2025	Datum revizije:

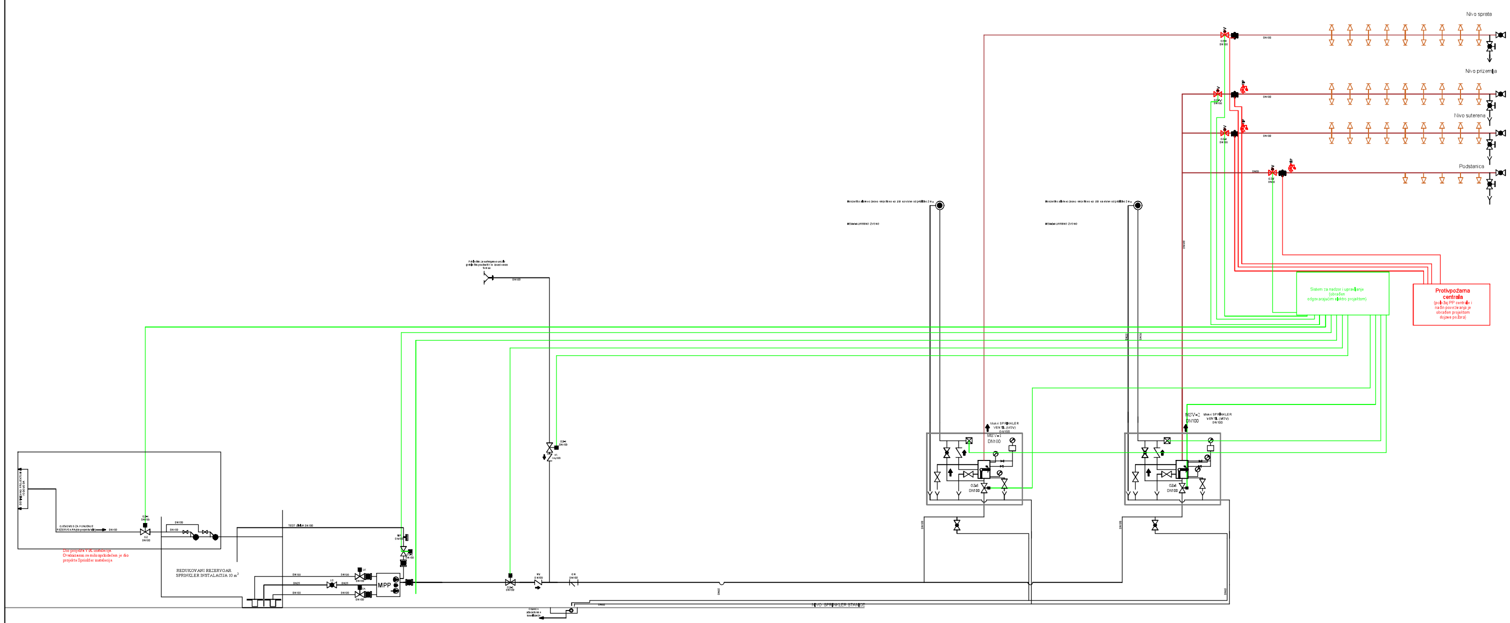

LEGENDA:

SSV	Suvi sprinkler ventil
	Priključak za vatrogasno vozilo (sastoji se od: klapne, 2 "Storc" priključka DN65, 2 slijepa "Storc" priključka i sabirnim priključkom za cjevovod DN100)
	Zasun
	Sprinkler viseća mlaznica
	Sprinkler stojeća mlaznica
	Loptasti ventil
	Test ventil sa K faktorom sprinkler mlaznice
	Signalizacija
	Signalizacija
	Set za testiranje indikatora protoka
	Zasun sa mikroprekidačem (mikroprekidač daje informaciju o položaju ventila "zatvoren/otvoren)
IP	Indikator protoka
MP	Mjerač protoka
M	Manometar

PROJEKTANT:

INGINVEST d.o.o.

Danilovgrad, Crna Gora

INVESTITOR:

JZU Opšta bolnica Bijelo Polje

Objekat: Rekonstrukcija postojećeg objekta bolnice u Bijelom Polju - dio lamela "C"

Lokacija: UP 29a u zahvatu DUP-a "Medanovići", koja se sastoji od katastarskih parcela 1933/1, 1933/12, 1964/7, 1940, 1963/3 i 1933/17 KO Bijelo Polje

Autor: ING INVEST DOO DANILOVGRAD

Vodeći projektant: Arh. Ilija Radulović, spec.sci. UPI 107/7-575/2	Vrsta tehničke dokumentacije: Glavni projekat	Oznaka projekta: 72/24
Odgovorni projektant: Marko Đekić, dipl.maš.inž, br.licence UPI 107/7-479/2	Dio tehničke dokumentacije: Mašinski projekat Sprinkler instalacije	Razmjera: 1:50
Saradnici: Olivera Ćirković, dipl.inž.maš. Kristina Nikolić, dipl.inž.maš.	Prilog: Tehnološka šema	Br. priloga: 09 / Br. strane: 09
Datum izrade i M.P 06.2025	Datum revizije	

NOSAČ TIP N1

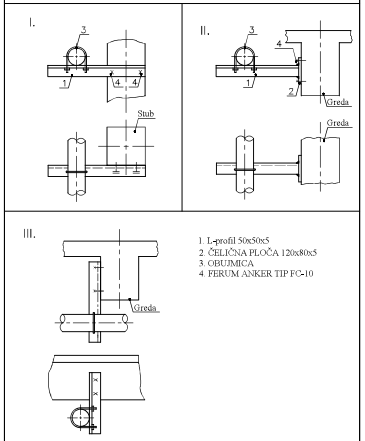

1. L-profil 50x50x5
2. ČELIČNA PLOČA 120x80x5
3. OBUJMICA
4. FERUM ANKER TIP FC-10

OBUJMICA

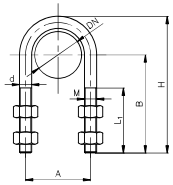

DN mm	d mm	M x L_1 mm	A mm	B mm	H mm	G kg
20	8	M8x40	39	45	60	0.07
25	8	M8x40	42	50	67	0.08
32	10	M10x50	53	60	82	0.13
40	10	M10x50	59	62	87	0.14
50	12	M12x55	73	68	99	0.33
60	12	M12x55	89	75	114	0.36
80	12	M12x55	102	85	130	0.40

Materijal: JUS C.B3. 021, čelik C.0300

NOSAČ SA KRUŠKASTOM OBUJMICOM

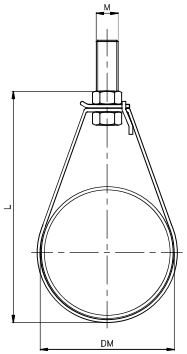

DN mm	L mm	M mm	DN mm	L mm	M mm
20	73	M8	65	128.4	M10
25	76	M8	80	153.4	M10
32	89	M8	100	200.4	M10
40	99	M8	125	198.5	M12
50	114	M8	150	226.5	M12

NAPOMENA: Maksimalno rastojanje od oslonca do sprinkler mlaznice ne smije biti veće od 0,9 m, ni manje od 0,15 m. Oslonce montirati na magistralnu cijev na svakih 3÷4 m. Oslonci ne smiju sadržati gorive elemente.

PROJEKTANT: **ING**INVEST d.o.o. Danilovgrad, Crna Gora	INVESTITOR: JZU Opšta bolnica Bijelo Polje
Objekat: Rekonstrukcija postojećeg objekta bolnice u Bijelom Polju - dio lamela "C"	Lokacija: UP 29a u zahvatu DUP-a "Medanovići", koja se sastoji od katastarskih parcela 1933/1, 1933/12, 1964/7, 1940, 1963/3 i 1933/17 KO Bijelo Polje
Autor: ING INVEST DOO DANILOVGRAD	
Vodeći projektant: Arh. Ilija Radulović, spec.arš, UPI 107/I-575/2	Vrsta tehničke dokumentacije: Glavni projekat / Oznaka projekta: 72/24
Odgovorni projektant: Marko Đekić, dipl.mašinž, br.licence UPI 107/I-479/2	Dio tehničke dokumentacije: Mašinski projekat Sprinkler instalacije / Razmjera: 1:50
Saradnici: Ljiljana Ćirković, dipl.inž.maš, Kristina Nikolić, dipl.inž.maš.	Prilog: Oslonci cjevovoda / Br. priloga: 10 / Br. strane: 10
Datum izrade i M.P. 06.2025	Datum revizije

DETALJ UGRADNJE SPRINKLER VISEĆIH MLAZNICA U SPUŠTENOM PLAFONU

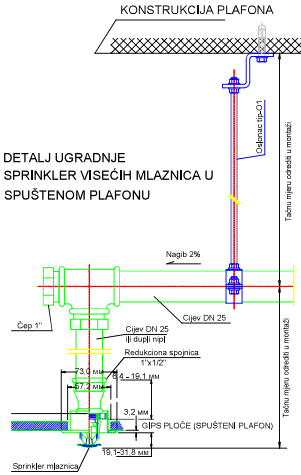

DETALJ UGRADNJE SPRINKLER VISEĆIH MLAZNICA

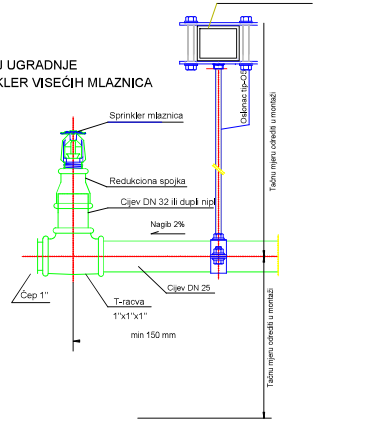

DETALJ UGRADNJE SPRINKLER STOJEĆIH MLAZNICA

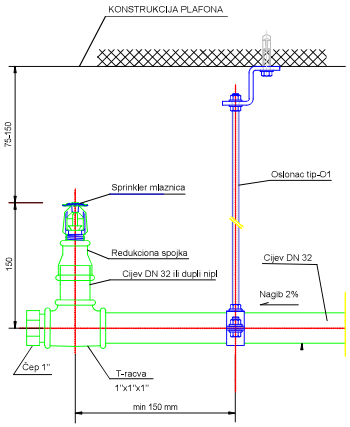

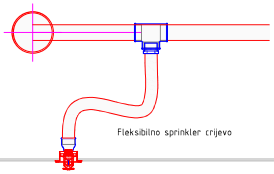

Spušteni plafon

Napomena: prečnici cijevi i rastojanja među elementima sprinkler cjevovoda su samo ilustrativni, pri montaži koristiti odgovarajuće crteže osnove i aksonometrijske prikaze

Napomena: Maksimalno rastojanje od oslonca do sprinkler mlaznice ne smije biti veće od 0,9m, ni manje od 0,15m.Fiksne oslonce montirati na magistralnu cijev na svakih 40 m. Oslonci ne smiju sadržati gorive elemente.

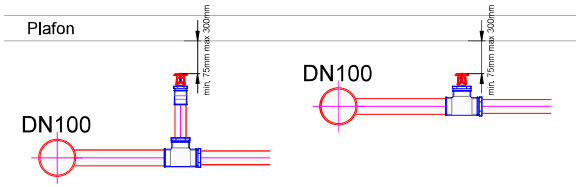

Montaža mlaznica u prostorima bez spuštenog plafona
(gde nije moguće postaviti magistralu blizu plafonskoj ploči)

Montaža mlaznica u prostorima bez spuštenog plafona
(gde je moguće postaviti magistralu blizu plafonskoj ploči)

RASTOJANJE SPRINKLERA OD KONSTRUKCIJE I OPREME KOJA SE NALAZI ISPOD SPRINKLER MLAZNICE

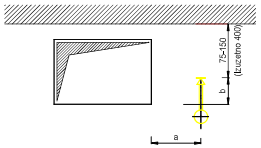

a (мм)	b (мм)
200	-20
400	0
600	30
800	60
1000	100
1200	140
1400	190
1600	260

PROJEKTANT: **INGINVEST d.o.o.** Danilovgrad, Crna Gora		INVESTITOR: JZU Opšta bolnica Bijelo Polje	
Objekat: Rekonstrukcija postojećeg objekta bolnice u Bijelom Polju - dio lamela "C"		Lokacija: UP 29a u zahvatu DUP-a "Medanovići", koja se sastoji od katastarskih parcela 1933/1, 1933/12, 1964/7, 1940, 1963/3 i 1933/17 KO Bijelo Polje	
Autor: ING INVEST DOO DANILOVGRAD			
Vodeći projektant: Arh. Ilija Radulović, spec.sci. UPI 107/7-575/2	Vrsta tehničke dokumentacije: Glavni projekat	Oznaka projekta: 72/24	
Odgovorni projektant: Marko Đekić, dipl.maš.inž, br.licence UPI 107/7-479/2	Dio tehničke dokumentacije: Mašinski projekat Sprinkler instalacije	Razmjera: 1:50	
Saradnici: Olivera Ćirković, dipl.inž.maš. Kristina Nikolić, dipl.inž.maš.	Prilog: **Detalj ugradnje mlaznice**	Br. priloga: 11	Br. strane: 11
Datum izrade i M.P. 05.2025	Datum revizije		